CARBOGA

shaping future

Fittings

22 model references · 2026

Model codes · Finishes · Dimensions

carboga.com | info@carboga.com | +90 532 160 29 56

CARBOGA

Fittings | Model index

289
281
284
290
40/EK-55
283
360
1212
1420
1411
1417
1418
1419
1421
1422
1213
1214
1215
1216
1217
1218
282

916
Cabinet Knob



40/EK-55
Shelving Railing With 40 mm & 50 mm



40 cm, 50 cm | Chrome | 50 Pieces

289
Closet and Open Pipe Holder



16 mm
25 mm | Saten, Chrome M.Chrome | 50 Pieces

e (51 mm)



100 Pieces

281
Screwed flange (16 mm)
Eco, Lux



Saten, Chrome M.Chrome | 100 Pieces

284
Screwed Flange T & L Type Pipe



Saten, Chrome | 100 Pieces

290
Screwed Long Flange (25 mm)



Saten, Chrome M.Chrome | 50 Pieces

1064
Stainless Steel 304



Ø 75
Stainless Recessed Button

360
Stainless Steel 304



Ø 40
Stainless Recessed Button

1066
Stainless Steel 304



1065
Stainless Steel 304



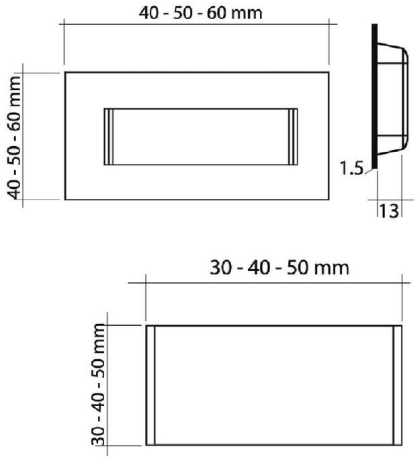

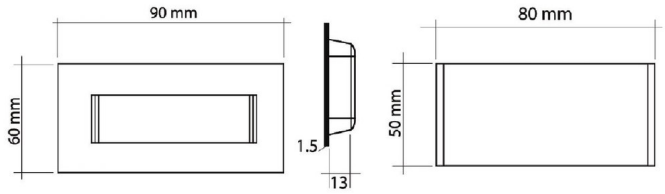

1212 Door Stopers

Assembling Joint Component



Assembling Joint Component

Details	
Material	: Zamak + Magnetic Magnet
Installation	: Star Screwdriver PZ2 and Flat Screwdriver
	: Saten, Chrome, Antique, Gold

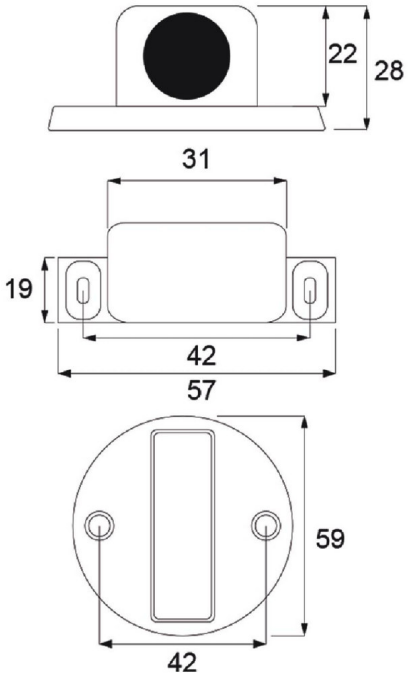



● 1420



10 cm 2.5mm | 100 Pieces

● 1421



12 cm 2.5mm | 100 Pieces

● 1422



● 1411



10 cm 2mm - 10 cm 2.5mm | 100 Pieces

● 1411



10 cm 2mm - 10 cm 2.5mm | 100 Pieces

● 1411



10 cm 2mm - 10 cm 2.5mm | 100 Pieces

● 1417

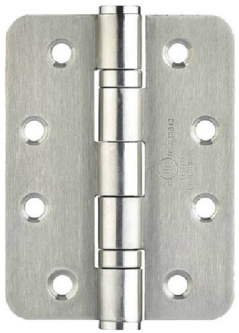

10 cm 2.5mm | 100 Pieces

● 1418



12 cm 2.5mm | 100 Pieces

● 1419



12 cm 2.5mm | 100 Pieces

360
Stainless Steel 304



Ø 40
Stainless Recessed Button

1213
Stainless Steel 304



Ø44 h: 25
Possibility of use with or without pins thanks to the adhesive tape

1214
Stainless Steel 304



Ø 25 h: 32

1215
Stainless Steel 304



Ø 25 h: 40

282
Small Zamak Moulding



Zamak

Ø 28 h: 35

282
Large Zamak Moulding



Zamak

Ø 28 h: 50

1216
Stainless Steel 304



Ø 30 h: 40

360
Stainless Steel 304

1217
Stainless Steel 304



Ø 30 h: 55

282
Small Zamak Moulding

1218
Stainless Steel 304



Ø 20 h: 48 Ø 20 h: 78

282
Large Zamak Moulding