CARBOGA

shaping future

Faucets & water fixtures

349 models · 2026



Water fixtures · Mixers · Accessories

carboga.com | info@carboga.com

CARBOGA

Model index

MA0105 - MIX ANKASTRE KARE BİR YÖNLÜ DUŞ BATARYA SETİ 12
MA0205 - MIX ANKASTRE YUVARLAK BİR YÖNLÜ DUŞ BATARYA SETİ 13
MA0205.10 - MIX ANKASTRE YUVARLAK BİR YÖNLÜ DUŞ BATARYA SETİ 2 14
MA0518 - MIX ANKASTRE MOSKOVA İNOKS TEPE DUŞ BAŞLIK SETİ 15
MA0418 - MIX ANKASTRE MOSKOVA TEPE DUŞ BAŞLIK SETİ 16
MA0718 - MIX ANKASTRE MİLANO İNOKS TEPE DUŞ BAŞLIK SETİ 17
MA0618 - MIX ANKASTRE MİLANO TEPE DUŞ BAŞLIK SETİ 18
MA0818B - MIX ANKASTRE TOKYO TEPE DUŞ BAŞLIK SETİ SİYAH 19
MA0918B - MIX ANKASTRE PEKİN TEPE DUŞ BAŞLIK SETİ SİYAH 20
MA1018 - MIX ANKASTRE SOFYA TEPE DUŞ BAŞLIK SETİ 21
MA1203 - MIX ANKASTRE KUVARS ÇIKIŞ DİRSEĞİ 22
MA1204 - MIX ANKASTRE KUVARS ÇIKIŞ DİRSEĞİ ASKILI 23
MA2203 - MIX ANKASTRE AY ÇIKIŞ DİRSEĞİ 24
MA2204 - MIX ANKASTRE AY ÇIKIŞ DİRSEĞİ ASKILI 25
MA1201 - MIX ANKASTRE KUVARS ÇIKIŞ UCU YÖNLENDİRİCİLİ 26
MA1202 - MIX ANKASTRE KUVARS ÇIKIŞ UCU 27
MA2201 - MIX ANKASTRE AY ÇIKIŞ UCU YÖNLENDİRİCİLİ 28
MA2202 - MIX ANKASTRE AY ÇIKIŞ UCU 29
MA0113 - MIX ANKASTRE KARE ŞATAF BATARYASI 30
MA0121 - MIX ANKASTRE KARE AYRIK ŞATAF BATARYASI 31
MA0221 - MIX ANKASTRE YUVARLAK AYRIK ŞATAF BATARYASI 32
MA0312 - MIX ANKASTRE PİRİT LAVABO BATARYASI 33
MA0110 - MIX ANKASTRE KARE ÜÇ YÖNLÜ BANYO BATARYASI 34
MA0210 - MIX ANKASTRE YUVARLAK ÜÇ YÖNLÜ BANYO BATARYASI 35
MA0108 - MIX ANKASTRE KARE İKİ YÖNLÜ BANYO BATARYASI 36
MA0208 - MIX ANKASTRE YUVARLAK İKİ YÖNLÜ BANYO BATARYASI 37
MA0106 - MIX ANKASTRE KARE BİR YÖNLÜ DUŞ BATARYASI 38
MA0206 - MIX ANKASTRE YUVARLAK BİR YÖNLÜ DUŞ BATARYASI 39
MA0114 - MIX ANKASTRE KARE ŞATAF BATARYA SETİ 40
MA0122 - MIX ANKASTRE KARE AYRIK ŞATAF BATARYA SETİ 41
MA0222 - MIX ANKASTRE YUVARLAK AYRIK ŞATAF BATARYA SETİ 42
MA0109 - MIX ANKASTRE KARE ÜÇ YÖNLÜ BANYO BATARYA SETİ 43
MA0209 - MIX ANKASTRE YUVARLAK ÜÇ YÖNLÜ BANYO BATARYA SETİ 44
MA0107 - MIX ANKASTRE KARE İKİ YÖNLÜ BANYO BATARYA SETİ 45
MA0107.10 - MIX ANKASTRE KARE İKİ YÖNLÜ BANYO BATARYA SETİ 2 46
MA0207 - MIX ANKASTRE YUVARLAK İKİ YÖNLÜ BANYO BATARYA SETİ 47
MA0207.10 - MIX ANKASTRE YUVARLAK İKİ YÖNLÜ BANYO BATARYA SETİ 2 48
MA1119 - MIX ANKASTRE ARTI STOP VANA 1/2" 49

CARBOGA

Model index

MA1120 - MIX ANKASTRE ARTI STOP VANA 3/4" 50
MA1219 - MIX ANKASTRE KUVARS STOP VANA 1/2" 51
MA1220 - MIX ANKASTRE KUVARS STOP VANA 3/4" 52
M3001 - MIX ONİKS BANYO BATARYASI 53
M3004 - MIX ONİKS KUĞU EVYE BATARYASI 54
M3004.10 - MIX ONİKS KUĞU EVYE BATARYASI 2 55
M3004.20 - MIX ONİKS KUĞU EVYE BATARYASI 3 56
M3004.30 - MIX ONİKS KUĞU EVYE BATARYASI 4 57
M3004.40 - MIX ONİKS KUĞU EVYE BATARYASI 5 58
M3007 - MIX ONİKS APLİKE EVYE BATARYASI 59
M3008 - MIX ONİKS DUŞ BATARYASI 60
M3012 - MIX ONİKS YÜKSEK LAVABO BATARYASI 61
M3014 - MIX ONİKS DUVARDAN EVYE BATARYASI 62
M3014.10 - MIX ONİKS DUVARDAN EVYE BATARYASI 2 63
M3019 - MIX ONİKS ŞATAF BATARYASI 64
M2901 - MIX GALEN BANYO BATARYASI 65
M2902 - MIX GALEN LAVABO BATARYASI 66
M2903 - MIX GALEN KUĞU LAVABO BATARYASI 67
M2904 - MIX GALEN KUĞU EVYE BATARYASI 68
M2908 - MIX GALEN DUŞ BATARYASI 69
M2914 - MIX GALEN DUVARDAN EVYE BATARYASI 70
M2915 - MIX GALEN BİDE BATARYASI 71
M2401 - MIX BERİL BANYO BATARYASI 72
M2402 - MIX BERİL LAVABO BATARYASI 73
M2403 - MIX BERİL KUĞU LAVABO BATARYASI 74
M2404 - MIX BERİL KUĞU EVYE BATARYASI 75
M2404.10 - MIX BERİL KUĞU EVYE BATARYASI 2 76
M2408 - MIX BERİL DUŞ BATARYASI 77
M2412 - MIX BERİL YÜKSEK LAVABO BATARYASI 78
M2414 - MIX BERİL DUVARDAN EVYE BATARYASI 79
M2416 - MIX BERİL ÇANAK LAVABO BATARYASI 80
M2417 - MIX BERİL SPİRALLİ EVYE BATARYASI 81
M2417.10 - MIX BERİL SPİRALLİ EVYE BATARYASI-2 82
M2417.20 - MIX BERİL SPİRALLİ EVYE BATARYASI-3 83
M2417.30 - MIX BERİL SPİRALLİ EVYE BATARYASI-4 84
M2417.40 - MIX BERİL SPİRALLİ EVYE BATARYASI-5 85
M2301 - MIX KEHRİBAR BANYO BATARYASI 86
M2302 - MIX KEHRİBAR LAVABO BATARYASI 87

CARBOGA

Model index

M2303 - MIX KEHRİBAR KUĞU LAVABO BATARYASI 88
M2304 - MIX KEHRİBAR KUĞU EVYE BATARYASI 89
M2304.10 - MIX KEHRİBAR KUĞU EVYE BATARYASI 2 90
M2307 - MIX KEHRİBAR APLİKE EVYE BATARYASI 91
M2308 - MIX KEHRİBAR DUŞ BATARYASI 92
M2312 - MIX KEHRİBAR YÜKSEK LAVABO BATARYASI 93
M2314 - MIX KEHRİBAR DUVARDAN EVYE BATARYASI 94
M2501 - MIX KORAL BANYO BATARYASI 95
M2502 - MIX KORAL LAVABO BATARYASI 96
M2504 - MIX KORAL KUĞU EVYE BATARYASI 97
M2504.10 - MIX KORAL KUĞU EVYE BATARYASI 2 98
M2507 - MIX KORAL APLİKE EVYE BATARYASI 99
M2508 - MIX KORAL DUŞ BATARYASI 100
M2516 - MIX KORAL ÇANAK LAVABO BATARYASI 101
M1501 - MIX AKİK BANYO BATARYASI 102
M1502 - MIX AKİK LAVABO BATARYASI 103
M1504 - MIX AKİK KUĞU EVYE BATARYASI 104
M1507 - MIX AKİK APLİKE EVYE BATARYASI 105
M1508 - MIX AKİK DUŞ BATARYASI 106
M1401 - MIX GARNET BANYO BATARYASI 107
M1402 - MIX GARNET LAVABO BATARYASI 108
M1403.10 - MIX GARNET KUĞU LAVABO BATARYASI 109
M1404.10 - MIX GARNET KUĞU EVYE BATARYASI 2 110
M1404 - MIX GARNET KUĞU EVYE BATARYASI 111
M1407 - MIX GARNET APLİKE EVYE BATARYASI 112
M1408 - MIX GARNET DUŞ BATARYASI 113
M1201 - MIX KUVARS BANYO BATARYASI 114
M1202 - MIX KUVARS LAVABO BATARYASI 115
M1204 - MIX KUVARS KUĞU EVYE BATARYASI 116
M1204.10 - MIX KUVARS KUĞU EVYE BATARYASI 2 117
M1207 - MIX KUVARS APLİKE EVYE BATARYASI 118
M1208 - MIX KUVARS DUŞ BATARYASI 119
M1215 - MIX KUVARS BİDE BATARYASI 120
M1216 - MIX KUVARS ÇANAK LAVABO BATARYASI 121
M1217 - MIX KUVARS HELEZONLU EVYE BATARYASI 122
M1219 - MIX KUVARS ŞATAF BATARYASI 123
M2001 - MIX UZAY BANYO BATARYASI 124
M2002 - MIX UZAY LAVABO BATARYASI 125

CARBOGA

Model index

M2003 - MIX UZAY KUĞU LAVABO BATARYASI 126
M2004 - MIX UZAY KUĞU EVYE BATARYASI 127
M2005 - MIX UZAY DÖNER LAVABO BATARYASI 128
M2007 - MIX UZAY APLİKE EVYE BATARYASI 129
M2008 - MIX UZAY DUŞ BATARYASI 130
M1301 - MIX TURKUAZ BANYO BATARYASI 131
M1302 - MIX TURKUAZ LAVABO BATARYASI 132
M1303 - MIX TURKUAZ KUĞU LAVABO BATARYASI 133
M1304 - MIX TURKUAZ KUĞU EVYE BATARYASI 134
M1307 - MIX TURKUAZ APLİKE EVYE BATARYASI 135
M1308 - MIX TURKUAZ DUŞ BATARYASI 136
M1312 - MIX TURKUAZ YÜKSEK LAVABO BATARYASI 137
M1314 - MIX TURKUAZ DUVARDAN EVYE BATARYASI 138
M2601 - MIX FLORİT BANYO BATARYASI 139
M2602 - MIX FLORİT LAVABO BATARYASI 140
M2603 - MIX FLORİT KUĞU LAVABO BATARYASI 141
M2604 - MIX FLORİT KUĞU EVYE BATARYASI 142
M2607 - MIX FLORİT APLİKE EVYE BATARYASI 143
M2608 - MIX FLORİT DUŞ BATARYASI 144
M2201 - MIX AY BANYO BATARYASI 145
M2203 - MIX AY KUĞU LAVABO BATARYASI 146
M2204 - MIX AY KUĞU EVYE BATARYASI 147
M2207 - MIX AY APLİKE EVYE BATARYASI 148
M2208 - MIX AY DUŞ BATARYASI 149
M2212 - MIX AY YÜKSEK LAVABO BATARYASI 150
M2214 - MIX AY DUVARDAN EVYE BATARYASI 151
M2101 - MIX FEZA BANYO BATARYASI 152
M2102 - MIX FEZA LAVABO BATARYASI 153
M2103 - MIX FEZA KUĞU LAVABO BATARYASI 154
M2104 - MIX FEZA KUĞU EVYE BATARYASI 155
M2107 - MIX FEZA APLİKE EVYE BATARYASI 156
M2108 - MIX FEZA DUŞ BATARYASI 157
M1101 - MIX YAKUT BANYO BATARYASI 158
M1103 - MIX YAKUT KUĞU LAVABO BATARYASI 159
M1104 - MIX YAKUT KUĞU EVYE BATARYASI 160
M1107 - MIX YAKUT APLİKE EVYE BATARYASI 161
M1108 - MIX YAKUT DUŞ BATARYASI 162
M1112 - MIX YAKUT YÜKSEK LAVABO BATARYASI 163

CARBOGA

Model index

M1115 - MIX YAKUT BİDE BATARYASI 164
M1116 - MIX YAKUT ÇANAK LAVABO BATARYASI 165
M1801 - MIX OLTU BANYO BATARYASI 166
M1802 - MIX OLTU LAVABO BATARYASI 167
M1803 - MIX OLTU KUĞU LAVABO BATARYASI 168
M1804 - MIX OLTU KUĞU EVYE BATARYASI 169
M1805 - MIX OLTU DÖNER LAVABO BATARYASI 170
M1806 - MIX OLTU DÖNER EVYE BATARYASI 171
M1807 - MIX OLTU APLİKE EVYE BATARYASI 172
M1808 - MIX OLTU DUŞ BATARYASI 173
M1812 - MIX OLTU YÜKSEK LAVABO BATARYASI 174
M1814 - MIX OLTU DUVARDAN EVYE BATARYASI 175
M1818 - MIX OLTU BERBER BATARYASI 176
M1901 - MIX AMBER BANYO BATARYASI 177
M1902 - MIX AMBER LAVABO BATARYASI 178
M1903 - MIX AMBER KUĞU LAVABO BATARYASI 179
M1904 - MIX AMBER KUĞU EVYEBATARYASI 180
M1905 - MIX AMBER DÖNER LAVABO BATARYASI 181
M1906 - MIX AMBER DÖNER EVYE BATARYASI 182
M1907 - MIX AMBER APLİKE EVYE BATARYASI 183
M1908 - MIX AMBER DUŞ BATARYASI 184
M1912 - MIX AMBER YÜKSEK LAVABO BATARYASI 185
M1919 - MIX AMBER ŞATAF BATARYASI 186
M1001 - MIX YEŞİM BANYO BATARYASI 187
M1002 - MIX YEŞİM LAVABO BATARYASI 188
M1003 - MIX YEŞİM KUĞU LAVABO BATARYASI 189
M1004 - MIX YEŞİM KUĞU EVYEBATARYASI 190
M1007 - MIX YEŞİM APLİKE EVYE BATARYASI 191
M1008 - MIX YEŞİM DUŞ BATARYASI 192
M1601 - MIX İNCİ BANYO BATARYASI 193
M1602 - MIX İNCİ LAVABO BATARYASI 194
M1603 - MIX İNCİ KUĞU LAVABO BATARYASI 195
M1604 - MIX İNCİ KUĞU EVYE BATARYASI 196
M1607 - MIX İNCİ APLİKE EVYE BATARYASI 197
M1608 - MIX İNCİ DUŞ BATARYASI 198
M1612 - MIX İNCİYÜKSEK LAVABO BATARYASI 199
M1619 - MIX İNCİ ŞATAF BATARYASI 200
M0901 - MIX SAFİR BANYO BATARYASI 201

CARBOGA

Model index

M0902 - MIX SAFİR LAVABO BATARYASI 202
M0903 - MIX SAFİR KUĞU LAVABO BATARYASI 203
M0904 - MIX SAFİR KUĞU EVYE BATARYASI 204
M0907 - MIX SAFİR APLİKE EVYE BATARYASI 205
M0908 - MIX SAFİR DUŞ BATARYASI 206
M0912 - MIX SAFİR YÜKSEK LAVABO BATARYASI 207
M0919 - MIX SAFİR ŞATAF BATARYASI 208
M1701 - MIX MERCAN BANYO BATARYASI 209
M1702 - MIX MERCAN LAVABO BATARYASI 210
M1703 - MIX MERCAN KUĞU LAVABO BATARYASI 211
M1704 - MIX MERCAN KUĞU EVYE BATARYASI 212
M1707 - MIX MERCAN APLİKE EVYE BATARYASI 213
M1708 - MIX MERCAN DUŞ BATARYASI 214
M1719 - MIX MERCAN ŞATAF BATARYASI 215
M2805.101 - MIX SPİNEL DÖNER LAVABO BATARYASI 1 216
M2805.102 - MIX SPİNEL DÖNER LAVABO BATARYASI 2 217
M2805.103 - MIX SPİNEL DÖNER LAVABO BATARYASI 3 218
M2805.211 - MIX SPİNEL DÖNER LAVABO BATARYASI 4 219
M2805.212 - MIX SPİNEL DÖNER LAVABO BATARYASI 5 220
M2805.213 - MIX SPİNEL DÖNER LAVABO BATARYASI 6 221
M2702 - MIX MONO LAVABO BATARYASI 222
M2704 - MIX MONO KUĞU EVYE BATARYASI 223
M2709 - MIX MONO UZUN MUSLUK 224
M2710 - MIX MONO MERMERÜSTÜ EVYE BATARYASI 1 225
M2710.10 - MIX MONO MERMERÜSTÜ EVYE BATARYASI 2 226
M2711 - MIX MONO MERMERÜSTÜ LAVABO BATARYASI 227
M2714 - MIX MONO DUVARDAN EVYE BATARYASI 228
M3017 - MIX LAPİS HELEZONLU EVYE BATARYASI 229
M3120 - MIX TOPAZ ESNEK BORULU EVYE BATARYASI 230
M3221 - MIX OPAL ARTMALI EVYE BATARYASI 231
S0502 - FOTOSELLİ LÂL LAVABO BATARYASI 232
S0622 - FOTOSELLİ TURMALİN LAVABO BATARYASI 233
S0722 - FOTOSELLİ SİTRİN LAVABO BATARYASI 234
S0317 - FOTOSELLİ KARE SIVA ALTI PİSUVAR BATARYASI 235
S0416 - FOTOSELLİ YUVARLAK SIVA ÜSTÜ PİSUVAR BATARYASI 236
K0620 - KLASİK YONCA BANYO BATARYASI 237
K0622 - KLASİK YONCA KUĞU EVYE BATARYASI 238
K0622.10 - KLASİK YONCA KUĞU EVYE BATARYASI 2 239

CARBOGA

Model index

K0623 - KLASİK YONCA DUVARDAN LAVABO BATARYASI 240
K0624 - KLASİK YONCA DUVARDAN EVYE BATARYASI 241
K0624.10 - KLASİK YONCA DUVARDAN EVYE BATARYASI 2 242
K0625 - KLASİK YONCA UZUN MUSLUK 243
K0626 - KLASİK YONCA KISA MUSLUK 244
K0627 - KLASİK YONCA ÇAMAŞIR MUSLUĞU 245
K0628 - KLASİK YONCA UZUN MUSLUK AÇ KAPAT 246
K0629 - KLASİK YONCA KISA MUSLUK AÇ KAPAT 247
K0630 - KLASİK YONCA KÜRESEL BANYO BATARYASI 248
K0631 - KLASİK YONCA MERMER ÜSTÜ EVYE BATARYASI 249
K0634 - KLASİK YONCA KÖPRÜ EVYE BATARYASI 250
K0635 - KLASİK YONCA KUĞU LAVABO BATARYASI 251
K0640 - KLASİK YONCA VOLAN TAKIMI 252
K0641 - KLASİK YONCA VOLAN TAKIMI AÇ KAPAT 253
K0642 - KLASİK YONCA ÇİFTLİ MUSLUK 254
K0520 - KLASİK BEREN BANYO BATARYASI 255
K0522 - KLASİK BEREN KUĞU EVYE BATARYASI 256
K0523 - KLASİK BEREN DUVARDAN LAVABO BATARYASI 257
K0524 - KLASİK BEREN DUVARDAN EVYE BATARYASI 258
K0525 - KLASİK BEREN UZUN MUSLUK 259
K0526 - KLASİK BEREN KISA MUSLUK 260
K0527 - KLASİK BEREN ÇAMAŞIR MUSLUĞU 261
K0528 - KLASİK BEREN UZUN MUSLUK AÇ KAPAT 262
K0529 - KLASİK BEREN KISA MUSLUK AÇ KAPAT 263
K0531 - KLASİK BEREN MERMER ÜSTÜ EVYE BATARYASI 264
K0532 - KLASİK BEREN DUVARDAN TEKLİ EVYE BATARYASI 265
K0534 - KLASİK BEREN KÖPRÜ EVYE BATARYASI 266
K0535 - KLASİK BEREN KUĞU LAVABO BATARYASI 267
K0536 - KLASİK BEREN APLİKE EVYE BATARYASI 268
K0540 - KLASİK BEREN VOLAN TAKIMI 269
K0541 - KLASİK BEREN VOLAN TAKIMI AÇ KAPAT 270
K0542 - KLASİK BEREN ÇİFTLİ MUSLUK 271
K0420 - KLASİK PİRAMİT BANYO BATARYASI 272
K0422 - KLASİK PİRAMİT KUĞU EVYE BATARYASI 273
K0422.10 - KLASİK PİRAMİT KUĞU EVYE BATARYASI 2 274
K0423 - KLASİK PİRAMİT DUVARDAN LAVABO BATARYASI 275
K0424 - KLASİK PİRAMİT DUVARDAN EVYE BATARYASI 276
K0424.10 - KLASİK PİRAMİT DUVARDAN EVYE BATARYASI 2 277

Model index

K0425 - KLASİK PİRAMİT UZUN MUSLUK 278
K0426 - KLASİK PİRAMİT KISA MUSLUK 279
K0427 - KLASİK PİRAMİT ÇAMAŞIR MUSLUĞU 280
K0428 - KLASİK PİRAMİT UZUN MUSLUK AÇ KAPAT 281
K0429 - KLASİK PİRAMİT KISA MUSLUK AÇ KAPAT 282
K0430 - KLASİK PİRAMİT KÜRESEL BANYO BATARYASI 283
K0431 - KLASİK PİRAMİT MERMER ÜSTÜ EVYE BATARYASI 284
K0433 - KLASİK PİRAMİT DUVARDAN SABİT EVYE BATARYASI 285
K0434 - KLASİK PİRAMİT KÖPRÜ EVYE BATARYASI 286
K0435 - KLASİK PİRAMİT KUĞU LAVABO BATARYASI 287
K0440 - KLASİK PİRAMİT VOLAN TAKIMI 288
K0441 - KLASİK PİRAMİT VOLAN TAKIMI AÇ KAPAT 289
K0442 - KLASİK PİRAMİT ÇİFTLİ MUSLUK 290
A0263 - ARA MUSLUK GÜMÜŞ - OMEGA 1/2" - 1/2" 291
A0264 - ARA MUSLUK GÜMÜŞ - OMEGA 1/2" - 1/2" AÇ KAPAT 292
A0355 - ARA MUSLUK TUNÇ - TETA 1/2" - 1/2" 293
A0356 - ARA MUSLUK TUNÇ - TETA 1/2" - 1/2" AÇ KAPAT 294
A0563 - ARA MUSLUK BEREN - OMEGA 1/2" - 1/2" 295
A0564 - ARA MUSLUK BEREN - OMEGA 1/2" - 1/2" AÇ KAPAT 296
A0663 - ARA MUSLUK YONCA - OMEGA 1/2" - 1/2" 297
A0664 - ARA MUSLUK YONCA - OMEGA 1/2" - 1/2" AÇ KAPAT 298
A5462 - ARA MUSLUK GEO FİLİTRELİ 1/2" 299
A5559 - ARA MUSLUK TRİ - GAMA 1/2" - M12 300
U2510 - UZATMA 25 ÇAP 1 CM. 301
U2515 - UZATMA 25 ÇAP 1,5 CM. 302
U2520 - UZATMA 25 ÇAP 2 CM. 303
U2525 - UZATMA 25 ÇAP 2,5 CM. 304
U2530 - UZATMA 25 ÇAP 3 CM. 305
U2540 - UZATMA 25 ÇAP 4 CM. 306
U2550 - UZATMA 25 ÇAP 5 CM. 307
F0102 - FLEKS HORTUM 3/8"-3/8" 20CM. 308
F0103 - FLEKS HORTUM 3/8"-3/8" 30CM. 309
F0104 - FLEKS HORTUM 3/8"-3/8" 40CM. 310
F0105 - FLEKS HORTUM 3/8"-3/8" 50CM. 311
F0106 - FLEKS HORTUM 3/8"-3/8" 60CM. 312
F0107 - FLEKS HORTUM 3/8"-3/8" 70CM. 313
F0108 - FLEKS HORTUM 3/8"-3/8" 80CM. 314
F0109 - FLEKS HORTUM 3/8"-3/8" 90CM. 315

CARBOGA

Model index

F0110 - FLEKS HORTUM 3/8"-3/8" 100CM. 316
F0202 - FLEKS HORTUM 3/8"-3/8"N 20CM. 317
F0203 - FLEKS HORTUM 3/8"-3/8"N 30CM. 318
F0204 - FLEKS HORTUM 3/8"-3/8"N 40CM. 319
F0205 - FLEKS HORTUM 3/8"-3/8"N 50CM. 320
F0206 - FLEKS HORTUM 3/8"-3/8"N 60CM. 321
F0207 - FLEKS HORTUM 3/8"-3/8"N 70CM. 322
F0208 - FLEKS HORTUM 3/8"-3/8"N 80CM. 323
F0209 - FLEKS HORTUM 3/8"-3/8"N 90CM. 324
F0210 - FLEKS HORTUM 3/8"-3/8"N 100CM. 325
F0302 - FLEKS HORTUM 3/8"-1/2" 20CM. 326
F0303 - FLEKS HORTUM 3/8"-1/2" 30CM. 327
F0304 - FLEKS HORTUM 3/8"-1/2" 40CM. 328
F0305 - FLEKS HORTUM 3/8"-1/2" 50CM. 329
F0306 - FLEKS HORTUM 3/8"-1/2" 60CM. 330
F0307 - FLEKS HORTUM 3/8"-1/2" 70CM. 331
F0308 - FLEKS HORTUM 3/8"-1/2" 80CM. 332
F0309 - FLEKS HORTUM 3/8"-1/2" 90CM. 333
F0310 - FLEKS HORTUM 3/8"-1/2" 100CM. 334
F0402 - FLEKS HORTUM 1/2"-1/2" 20CM. 335
F0403 - FLEKS HORTUM 1/2"-1/2" 30CM. 336
F0404 - FLEKS HORTUM 1/2"-1/2" 40CM. 337
F0405 - FLEKS HORTUM 1/2"-1/2" 50CM. 338
F0406 - FLEKS HORTUM 1/2"-1/2" 60CM. 339
F0407 - FLEKS HORTUM 1/2"-1/2" 70CM. 340
F0408 - FLEKS HORTUM 1/2"-1/2" 80CM. 341
F0409 - FLEKS HORTUM 1/2"-1/2" 90CM. 342
F0410 - FLEKS HORTUM 1/2"-1/2" 100CM. 343
F0502 - FLEKS HORTUM 1/2"-1/2"N 20CM. 344
F0503 - FLEKS HORTUM 1/2"-1/2"N 30CM. 345
F0504 - FLEKS HORTUM 1/2"-1/2"N 40CM. 346
F0505 - FLEKS HORTUM 1/2"-1/2"N 50CM. 347
F0506 - FLEKS HORTUM 1/2"-1/2"N 60CM. 348
F0507 - FLEKS HORTUM 1/2"-1/2"N 70CM. 349
F0508 - FLEKS HORTUM 1/2"-1/2"N 80CM. 350
F0509 - FLEKS HORTUM 1/2"-1/2"N 90CM. 351
F0510 - FLEKS HORTUM 1/2"-1/2"N 100CM. 352
M3401 - MIX SELENİT BANYO BATARYASI 353

CARBOGA

Model index

M3402 - MIX SELENİT LAVABO BATARYASI 354
M3404 - MIX SELENİT KUĞU EVYE BATARYASI 355
M3301 - MIX ATLANTİS BANYO BATARYASI 356
M3303 - MIX ATLANTİS KUĞU LAVABO BATARYASI 357
M3304 - MIX ATLANTİS KUĞU EVYE BATARYASI 358
M3312 - MIX ATLANTİS YÜKSEK LAVABO BATARYASI 359
M3316 - MIX ATLANTİS ÇANAK LAVABO BATARYASI 360

CARBOGA

Concealed systems / BİR YÖNLÜ DUŞ BATARYA SETLERİ

MA0105 - MIX ANKASTRE KARE BİR YÖNLÜ DUŞ BATARYA SETİ

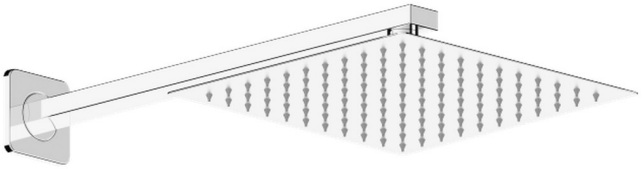



Chrome

Confirm finish, quantity and destination with your quotation.

MA0205 - MIX ANKASTRE YUVARLAK BİR YÖNLÜ DUŞ BATARYA SETİ





Chrome

Confirm finish, quantity and destination with your quotation.

MA0205.10 - MIX ANKASTRE YUVARLAK BİR YÖNLÜ DUŞ BATARYA SETİ 2





Chrome

Confirm finish, quantity and destination with your quotation.

MA0518 - MIX ANKASTRE MOSKOVA İNOKS TEPE DUŞ BAŞLIK SETİ

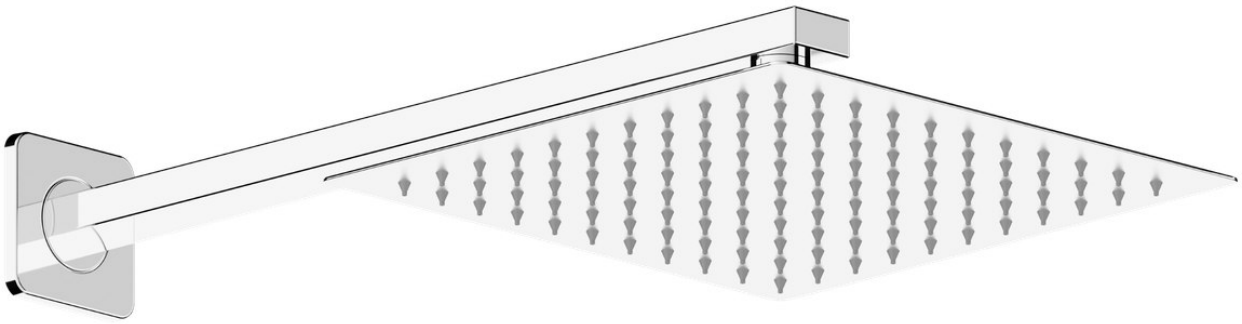

Chrome

Confirm finish, quantity and destination with your quotation.

MA0418 - MIX ANKASTRE MOSKOVA TEPE DUŞ BAŞLIK SETİ

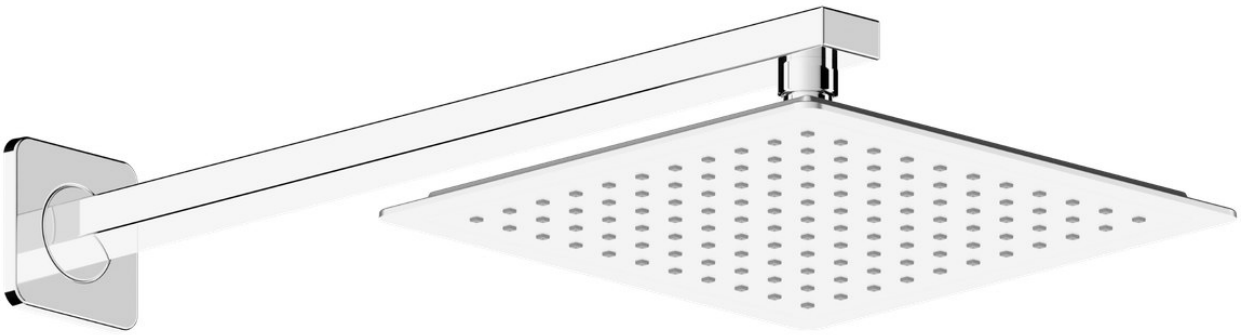

Chrome

Confirm finish, quantity and destination with your quotation.

MA0718 - MIX ANKASTRE MİLANO İNOKS TEPE DUŞ BAŞLIK SETİ

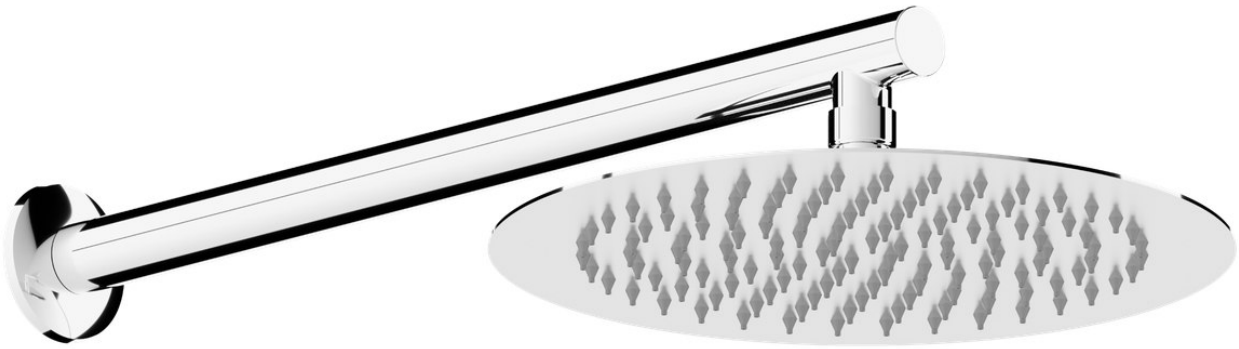

Chrome

Confirm finish, quantity and destination with your quotation.

MA0618 - MIX ANKASTRE MİLANO TEPE DUŞ BAŞLIK SETİ



Chrome

Confirm finish, quantity and destination with your quotation.

MA0818B - MIX ANKASTRE TOKYO TEPE DUŞ BAŞLIK SETİ SİYAH



Black

Confirm finish, quantity and destination with your quotation.

MA0918B - MIX ANKASTRE PEKİN TEPE DUŞ BAŞLIK SETİ SİYAH



Black

Confirm finish, quantity and destination with your quotation.

MA1018 - MIX ANKASTRE SOFYA TEPE DUŞ BAŞLIK SETİ



Chrome

Confirm finish, quantity and destination with your quotation.

MA1203 - MIX ANKASTRE KUVARS ÇIKIŞ DİRSEĞİ



Chrome

Confirm finish, quantity and destination with your quotation.

MA1204 - MIX ANKASTRE KUVARS ÇIKIŞ DİRSEĞİ ASKILI

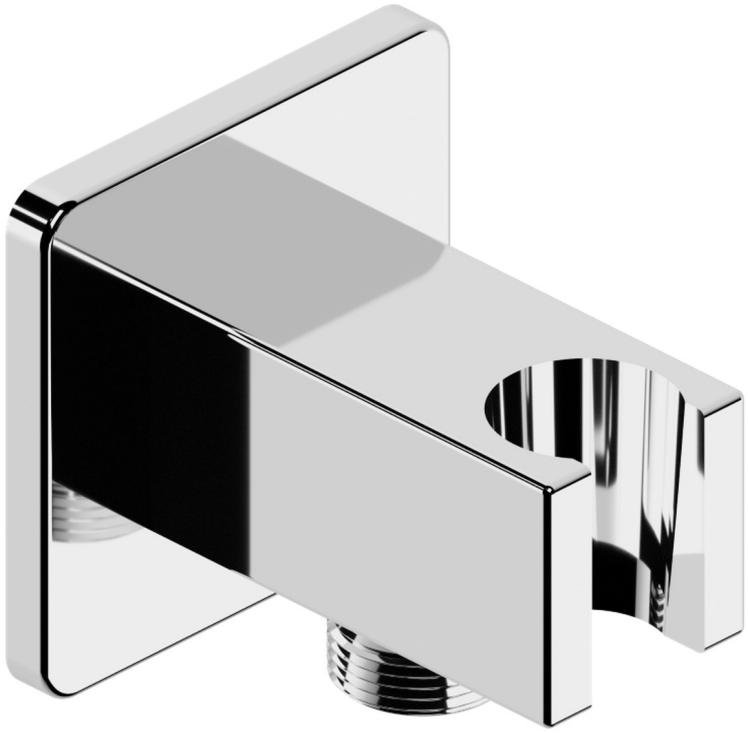

Chrome

Confirm finish, quantity and destination with your quotation.

MA2203 - MIX ANKASTRE AY ÇIKIŞ DİRSEĞİ



Chrome



Black



Satin



White

Confirm finish, quantity and destination with your quotation.

MA2204 - MIX ANKASTRE AY ÇIKIŞ DİRSEĞİ ASKILI



Chrome



Black

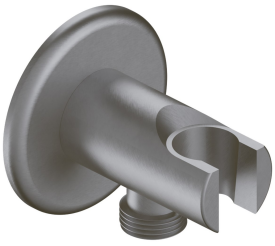

Satin



White

Confirm finish, quantity and destination with your quotation.

MA1201 - MIX ANKASTRE KUVARS ÇIKIŞ UCU YÖNLENDİRİCİLİ

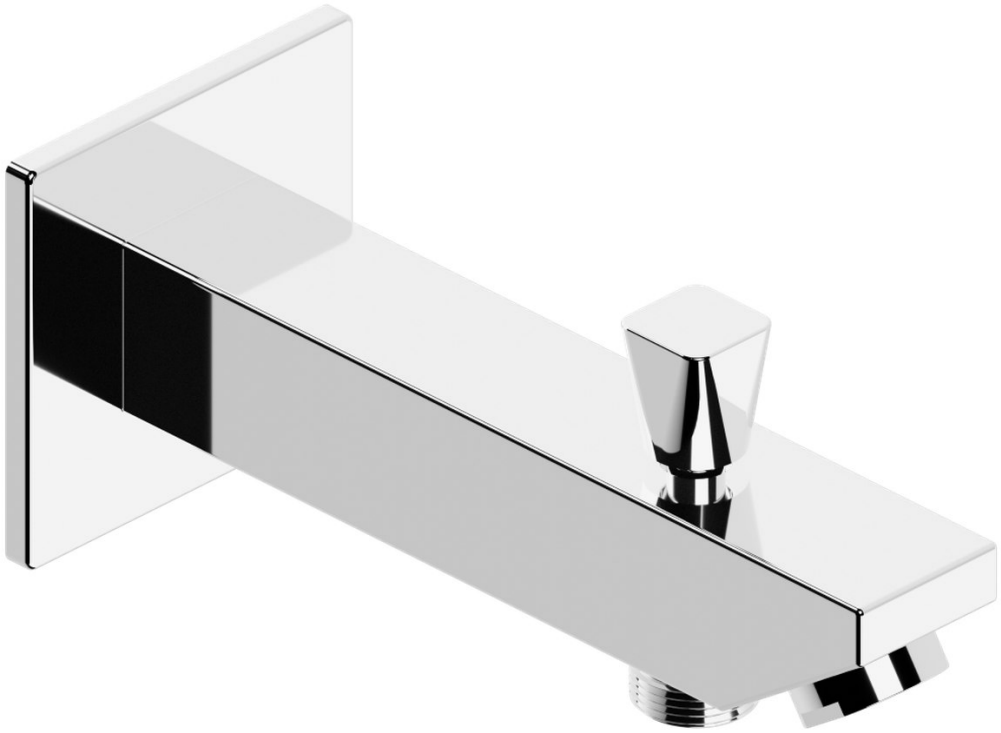

Chrome

Confirm finish, quantity and destination with your quotation.

MA1202 - MIX ANKASTRE KUVARS ÇIKIŞ UCU

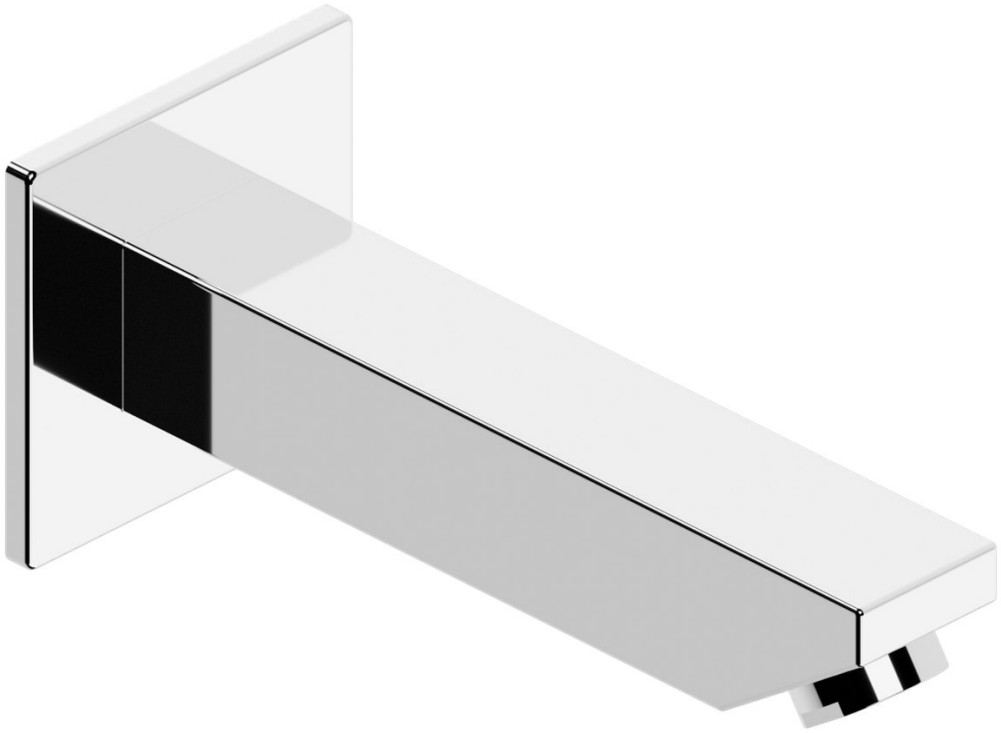

Chrome

Confirm finish, quantity and destination with your quotation.

MA2201 - MIX ANKASTRE AY ÇIKIŞ UCU YÖNLENDİRİCİLİ



Chrome



Black

Confirm finish, quantity and destination with your quotation.

MA2202 - MIX ANKASTRE AY ÇIKIŞ UCU

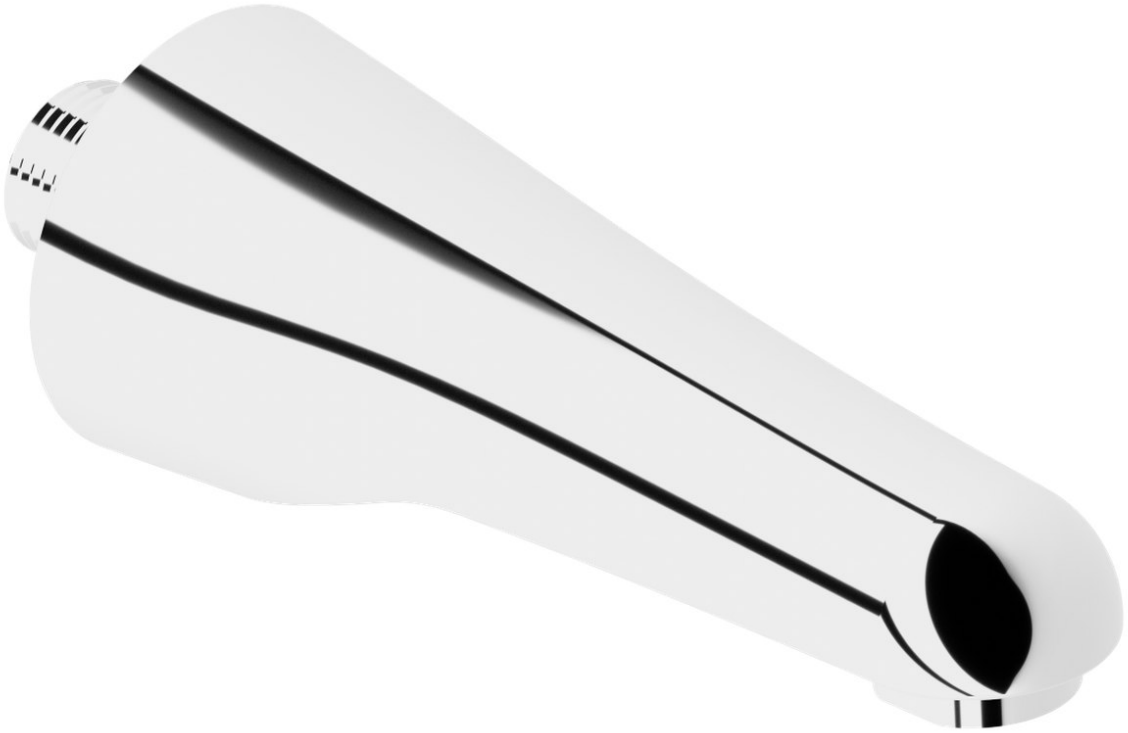

Chrome



White



Black

Confirm finish, quantity and destination with your quotation.

MA0113 - MIX ANKASTRE KARE ŞATAF BATARYASI



Chrome



Black

Confirm finish, quantity and destination with your quotation.

MA0121 - MIX ANKASTRE KARE AYRIK ŞATAF BATARYASI



Chrome

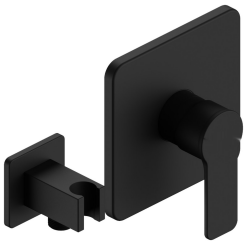

Black

Confirm finish, quantity and destination with your quotation.

MA0221 - MIX ANKASTRE YUVARLAK AYRIK ŞATAF BATARYASI



Chrome



Black

Confirm finish, quantity and destination with your quotation.

MA0312 - MIX ANKASTRE PİRİT LAVABO BATARYASI



Chrome



Black

Confirm finish, quantity and destination with your quotation.

MA0110 - MIX ANKASTRE KARE ÜÇ YÖNLÜ BANYO BATARYASI



Chrome



Black

Confirm finish, quantity and destination with your quotation.

MA0210 - MIX ANKASTRE YUVARLAK ÜÇ YÖNLÜ BANYO BATARYASI



Chrome



Black

Confirm finish, quantity and destination with your quotation.

MA0108 - MIX ANKASTRE KARE İKİ YÖNLÜ BANYO BATARYASI



Chrome



Black

Confirm finish, quantity and destination with your quotation.

MA0208 - MIX ANKASTRE YUVARLAK İKİ YÖNLÜ BANYO BATARYASI



Chrome



Black

Confirm finish, quantity and destination with your quotation.

MA0106 - MIX ANKASTRE KARE BİR YÖNLÜ DUŞ BATARYASI



Chrome

Confirm finish, quantity and destination with your quotation.

MA0206 - MIX ANKASTRE YUVARLAK BİR YÖNLÜ DUŞ BATARYASI



Chrome

Confirm finish, quantity and destination with your quotation.

MA0114 - MIX ANKASTRE KARE ŞATAF BATARYA SETİ



Chrome



Black

Confirm finish, quantity and destination with your quotation.

MA0122 - MIX ANKASTRE KARE AYRIK ŞATAF BATARYA SETİ



Chrome



Black

Confirm finish, quantity and destination with your quotation.

MA0222 - MIX ANKASTRE YUVARLAK AYRIK ŞATAF BATARYA SETİ



Chrome



Black

Confirm finish, quantity and destination with your quotation.

MA0109 - MIX ANKASTRE KARE ÜÇ YÖNLÜ BANYO BATARYA SETİ



Chrome



Black

Confirm finish, quantity and destination with your quotation.

MA0209 - MIX ANKASTRE YUVARLAK ÜÇ YÖNLÜ BANYO BATARYA SETİ



Chrome



Black

Confirm finish, quantity and destination with your quotation.

MA0107 - MIX ANKASTRE KARE İKİ YÖNLÜ BANYO BATARYA SETİ



Chrome



Black

Confirm finish, quantity and destination with your quotation.

MA0107.10 - MIX ANKASTRE KARE İKİ YÖNLÜ BANYO BATARYA SETİ 2



Chrome



Black

Confirm finish, quantity and destination with your quotation.

MA0207 - MIX ANKASTRE YUVARLAK İKİ YÖNLÜ BANYO BATARYA SETİ



Chrome



Black

Confirm finish, quantity and destination with your quotation.

MA0207.10 - MIX ANKASTRE YUVARLAK İKİ YÖNLÜ BANYO BATARYA SETİ 2



Chrome



Black

Confirm finish, quantity and destination with your quotation.

MA1119 - MIX ANKASTRE ARTI STOP VANA 1/2"

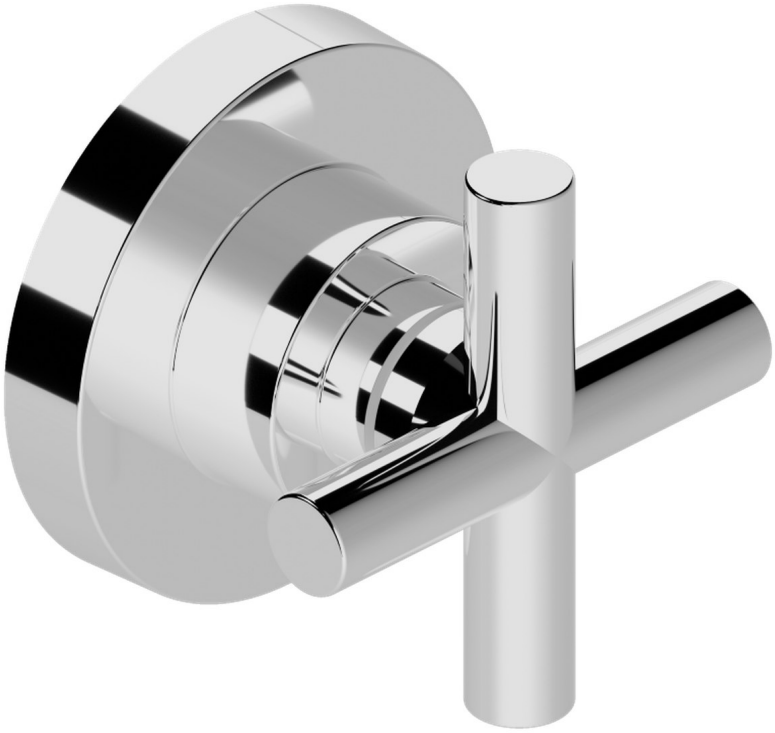

Chrome

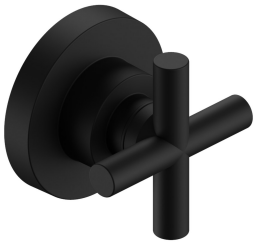

Black

Confirm finish, quantity and destination with your quotation.

MA1120 - MIX ANKASTRE ARTI STOP VANA 3/4"

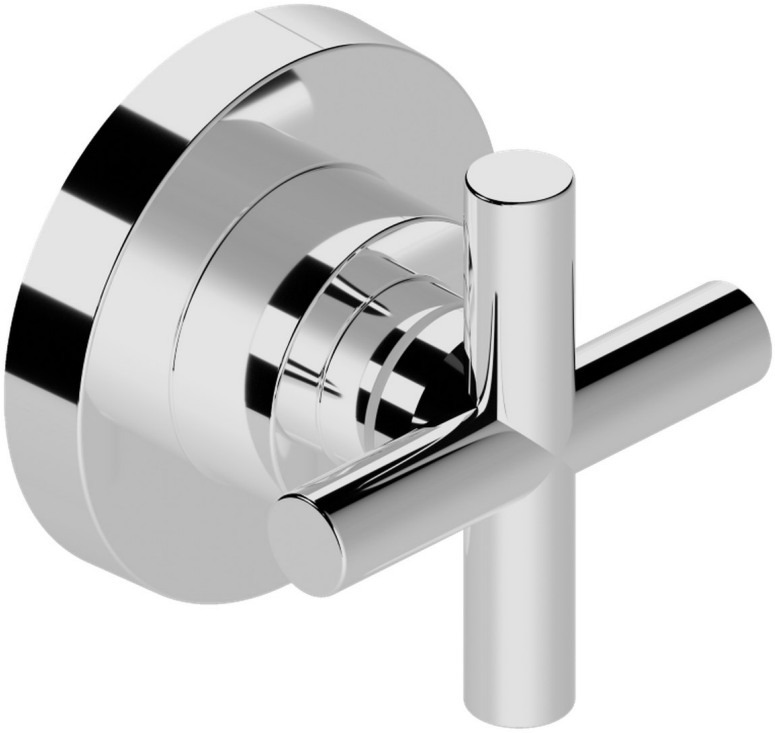

Chrome

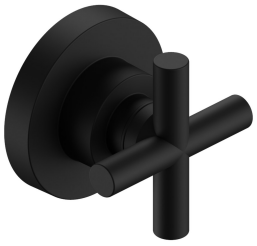

Black

Confirm finish, quantity and destination with your quotation.

MA1219 - MIX ANKASTRE KUVARS STOP VANA 1/2"

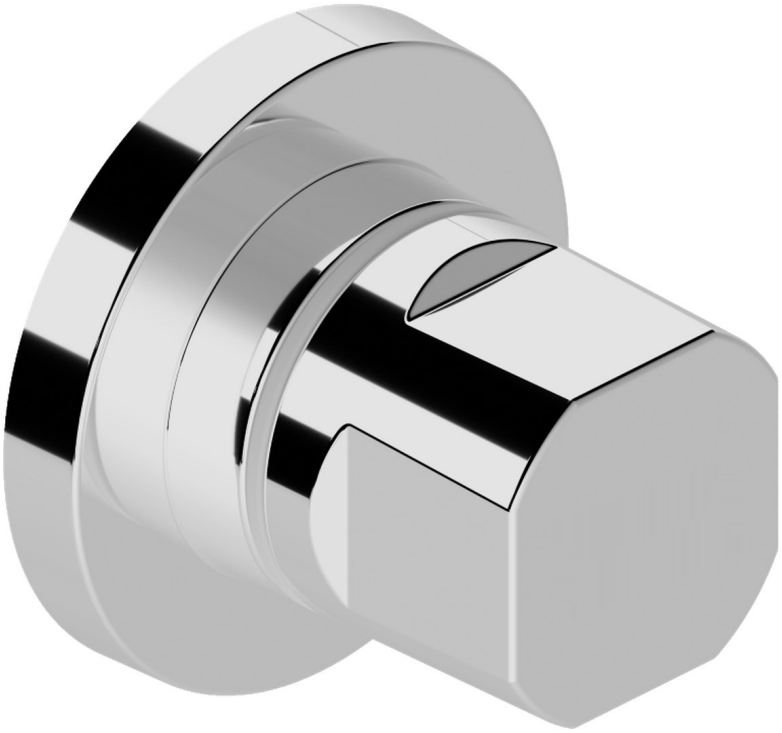

Chrome

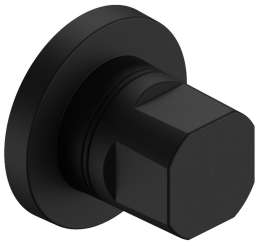

Black

Confirm finish, quantity and destination with your quotation.

MA1220 - MIX ANKASTRE KUVARS STOP VANA 3/4"

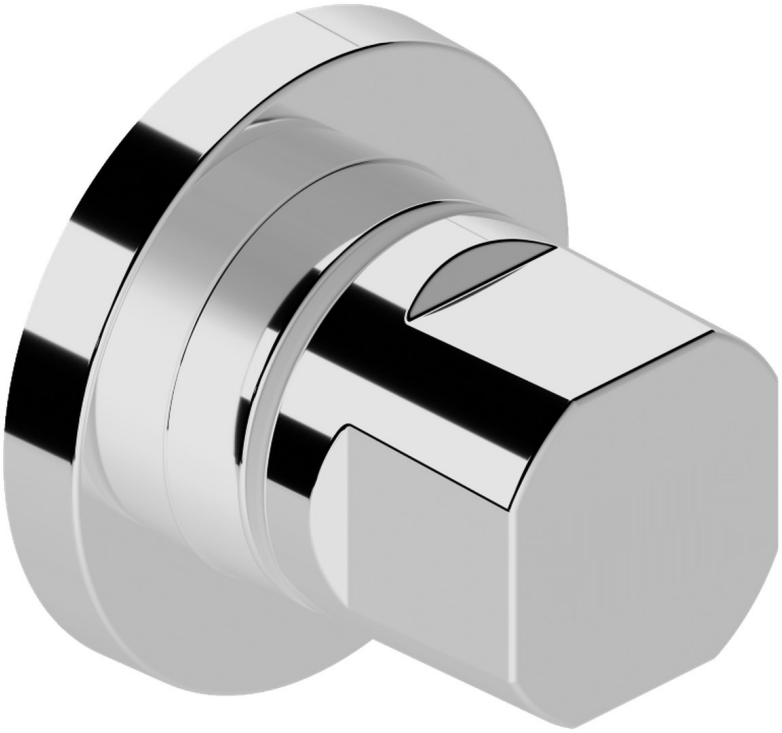

Chrome

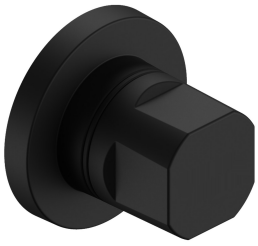

Black

Confirm finish, quantity and destination with your quotation.

M3001 - MIX ONİKS BANYO BATARYASI

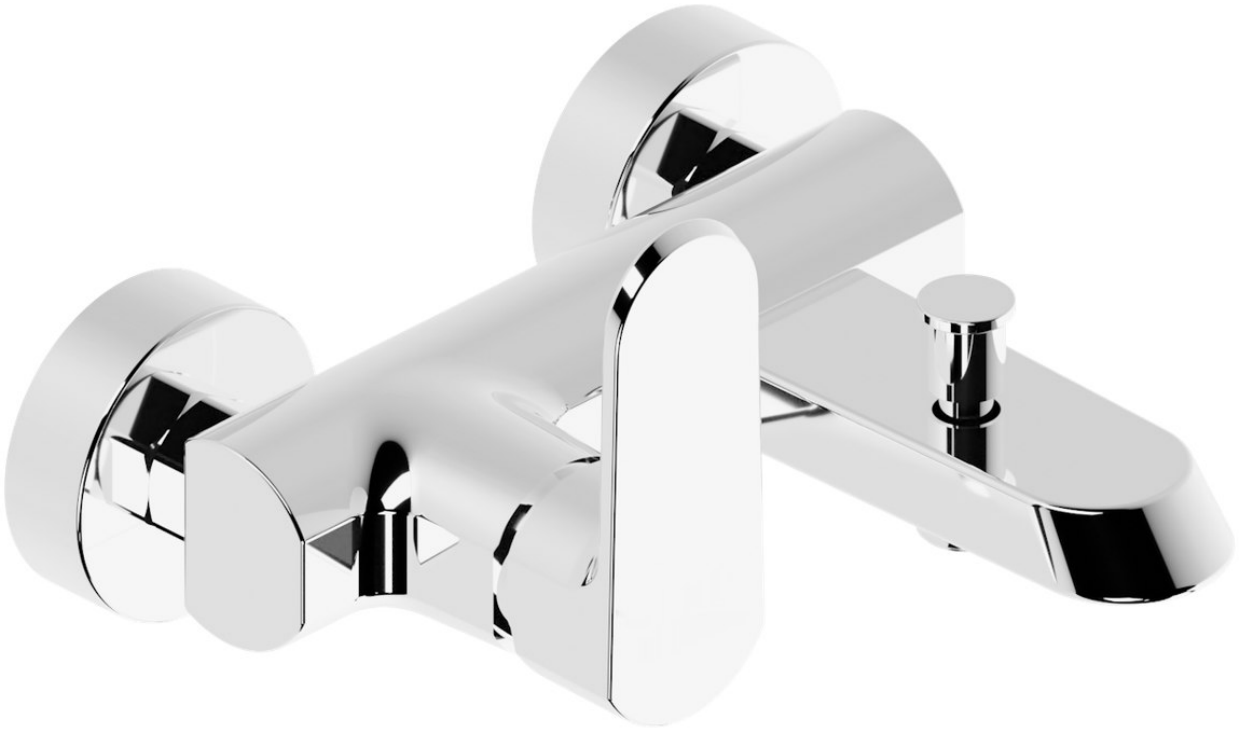

Chrome



Black

Confirm finish, quantity and destination with your quotation.

M3004 - MIX ONİKS KUĞU EVYE BATARYASI



Chrome

Confirm finish, quantity and destination with your quotation.

M3004.10 - MIX ONİKS KUĞU EVYE BATARYASI 2



Chrome - black flexible spout

Confirm finish, quantity and destination with your quotation.

M3004.20 - MIX ONİKS KUĞU EVYE BATARYASI 3



Chrome - white flexible spout

Confirm finish, quantity and destination with your quotation.

M3004.30 - MIX ONİKS KUĞU EVYE BATARYASI 4



Chrome - grey flexible spout

Confirm finish, quantity and destination with your quotation.

M3004.40 - MIX ONİKS KUĞU EVYE BATARYASI 5



Chrome



Black

Confirm finish, quantity and destination with your quotation.

M3007 - MIX ONİKS APLİKE EVYE BATARYASI



Chrome

Confirm finish, quantity and destination with your quotation.

M3008 - MIX ONİKS DUŞ BATARYASI



Chrome



Black

Confirm finish, quantity and destination with your quotation.

M3012 - MIX ONİKS YÜKSEK LAVABO BATARYASI



Chrome



Black

Confirm finish, quantity and destination with your quotation.

M3014 - MIX ONİKS DUVARDAN EVYE BATARYASI



Confirm finish, quantity and destination with your quotation.

M3014.10 - MIX ONİKS DUVARDAN EVYE BATARYASI 2



Chrome

Confirm finish, quantity and destination with your quotation.

M3019 - MIX ONİKS ŞATAF BATARYASI



Chrome

Confirm finish, quantity and destination with your quotation.

M2901 - MIX GALEN BANYO BATARYASI



Chrome



Black



White

Confirm finish, quantity and destination with your quotation.

M2902 - MIX GALEN LAVABO BATARYASI



Chrome



Black



White

Confirm finish, quantity and destination with your quotation.

M2903 - MIX GALEN KUĞU LAVABO BATARYASI



Chrome

Confirm finish, quantity and destination with your quotation.

M2904 - MIX GALEN KUĞU EVYE BATARYASI



Chrome

Confirm finish, quantity and destination with your quotation.

M2908 - MIX GALEN DUŞ BATARYASI



Chrome

Confirm finish, quantity and destination with your quotation.

M2914 - MIX GALEN DUVARDAN EVYE BATARYASI



Chrome



Black



White

Confirm finish, quantity and destination with your quotation.

M2915 - MIX GALEN BİDE BATARYASI



Chrome



White



Black

Confirm finish, quantity and destination with your quotation.

M2401 - MIX BERİL BANYO BATARYASI

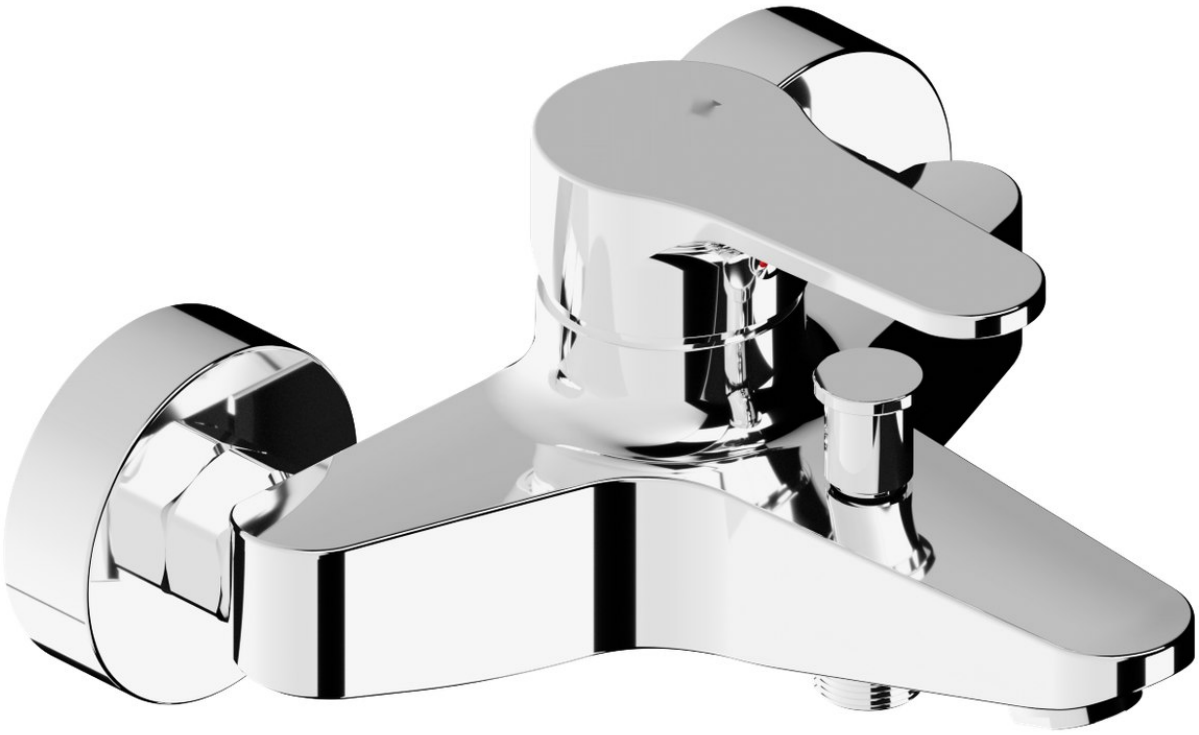

Chrome

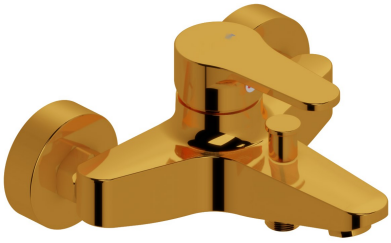

Gold



White

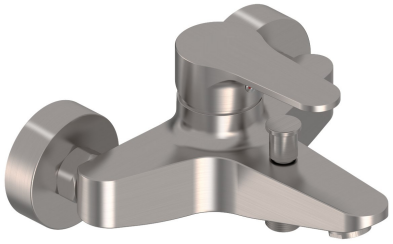

Satin



Beige granite



Anthracite



Black

Confirm finish, quantity and destination with your quotation.

M2402 - MIX BERİL LAVABO BATARYASI



Chrome



Gold



Anthracite



Black



Beige granite



Satin



White

Confirm finish, quantity and destination with your quotation.

M2403 - MIX BERİL KUĞU LAVABO BATARYASI



Chrome



Gold



Anthracite



Beige granite



Black granite



White granite



Black



Satin



White

Confirm finish, quantity and destination with your quotation.

M2404 - MIX BERİL KUĞU EVYE BATARYASI



Chrome



Gold



White granite



Anthracite



Black



Black granite



Beige granite



Satin



White

Confirm finish, quantity and destination with your quotation.

M2404.10 - MIX BERİL KUĞU EVYE BATARYASI 2



Chrome - black flexible spout



Chrome - white flexible spout



Chrome - grey flexible spout

Confirm finish, quantity and destination with your quotation.

M2408 - MIX BERİL DUŞ BATARYASI



Chrome

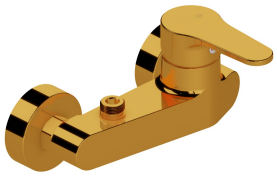

Gold



White granite



Black granite



Anthracite



Black



Beige granite

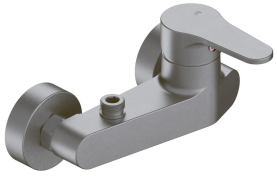

Satin



White

Confirm finish, quantity and destination with your quotation.

M2412 - MIX BERİL YÜKSEK LAVABO BATARYASI



Chrome



Gold



White granite



Black granite



Anthracite



Black



Beige granite



Satin



White

Confirm finish, quantity and destination with your quotation.

M2414 - MIX BERİL DUVARDAN EVYE BATARYASI



Chrome



Gold



Anthracite



Black granite



White granite



Black



Beige granite



Satin



White

Confirm finish, quantity and destination with your quotation.

M2416 - MIX BERİL ÇANAK LAVABO BATARYASI



Chrome



Black



White

Confirm finish, quantity and destination with your quotation.

M2417 - MIX BERİL SPİRALLİ EVYE BATARYASI



Chrome



Chrome

Confirm finish, quantity and destination with your quotation.

M2417.10 - MIX BERİL SPİRALLİ EVYE BATARYASI-2



Chrome



Chrome



Chrome

Confirm finish, quantity and destination with your quotation.

M2417.20 - MIX BERİL SPİRALLİ EVYE BATARYASI-3



Chrome



Chrome

Confirm finish, quantity and destination with your quotation.

M2417.30 - MIX BERİL SPİRALLİ EVYE BATARYASI-4



Chrome



Chrome

Confirm finish, quantity and destination with your quotation.

M2417.40 - MIX BERİL SPİRALLİ EVYE BATARYASI-5



Chrome



Chrome

Confirm finish, quantity and destination with your quotation.

M2301 - MIX KEHRİBAR BANYO BATARYASI

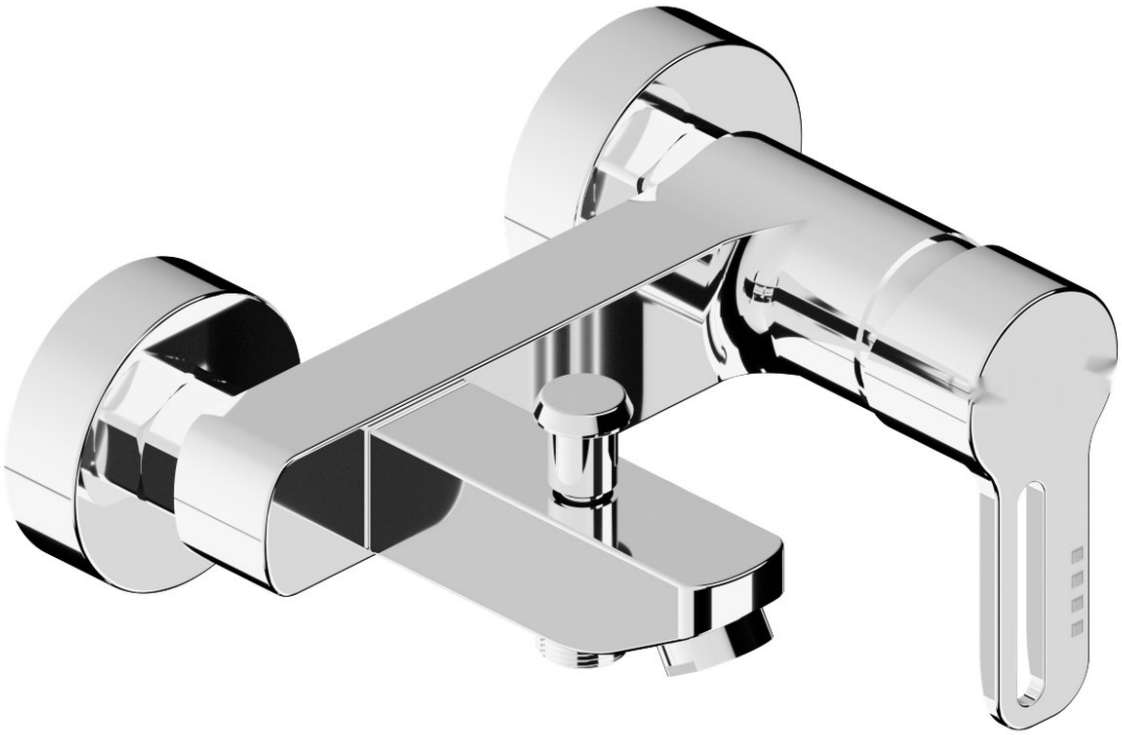

Chrome

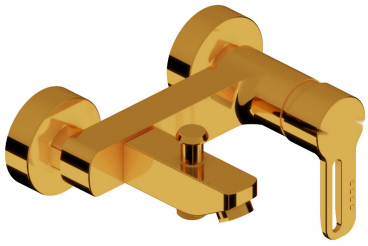

Gold

Confirm finish, quantity and destination with your quotation.

M2302 - MIX KEHRİBAR LAVABO BATARYASI



Chrome



Gold

Confirm finish, quantity and destination with your quotation.

M2303 - MIX KEHRİBAR KUĞU LAVABO BATARYASI



Chrome



Gold

Confirm finish, quantity and destination with your quotation.

M2304 - MIX KEHRİBAR KUĞU EVYE BATARYASI



Chrome



Gold

Confirm finish, quantity and destination with your quotation.

M2304.10 - MIX KEHRİBAR KUĞU EVYE BATARYASI 2



Chrome (black spout)



Gold (white spout)



Gold (grey spout)



Gold (black spout)



Chrome (grey spout)



Chrome (white spout)

Confirm finish, quantity and destination with your quotation.

M2307 - MIX KEHRİBAR APLİKE EVYE BATARYASI

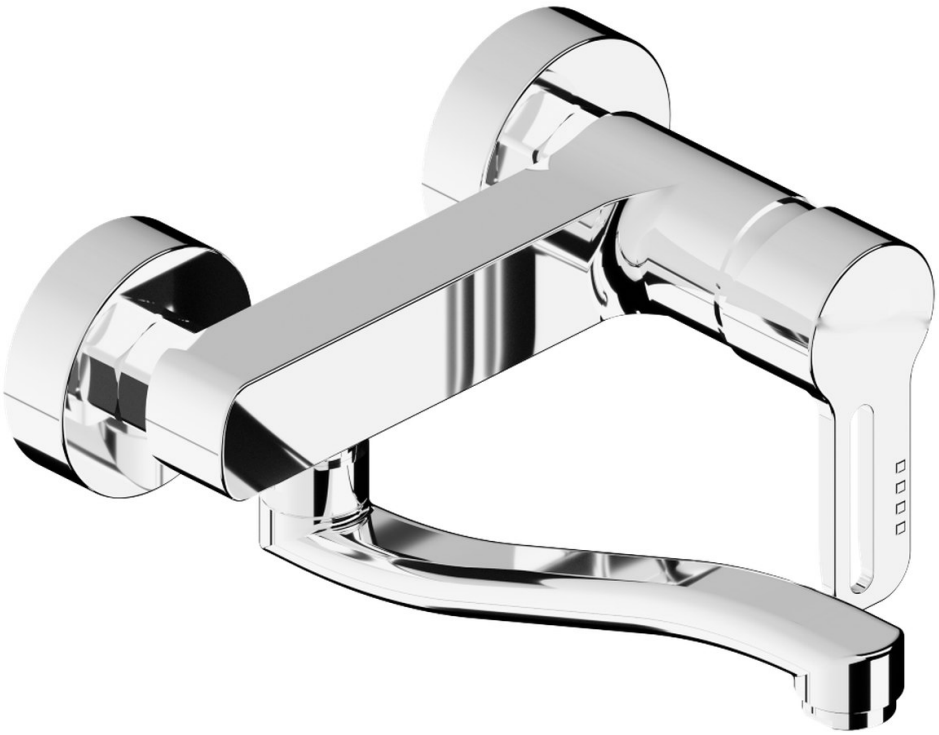

Chrome

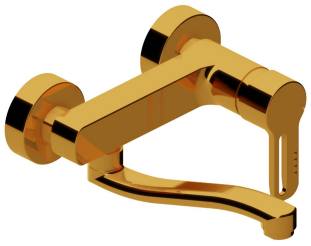

Gold

Confirm finish, quantity and destination with your quotation.

M2308 - MIX KEHRİBAR DUŞ BATARYASI

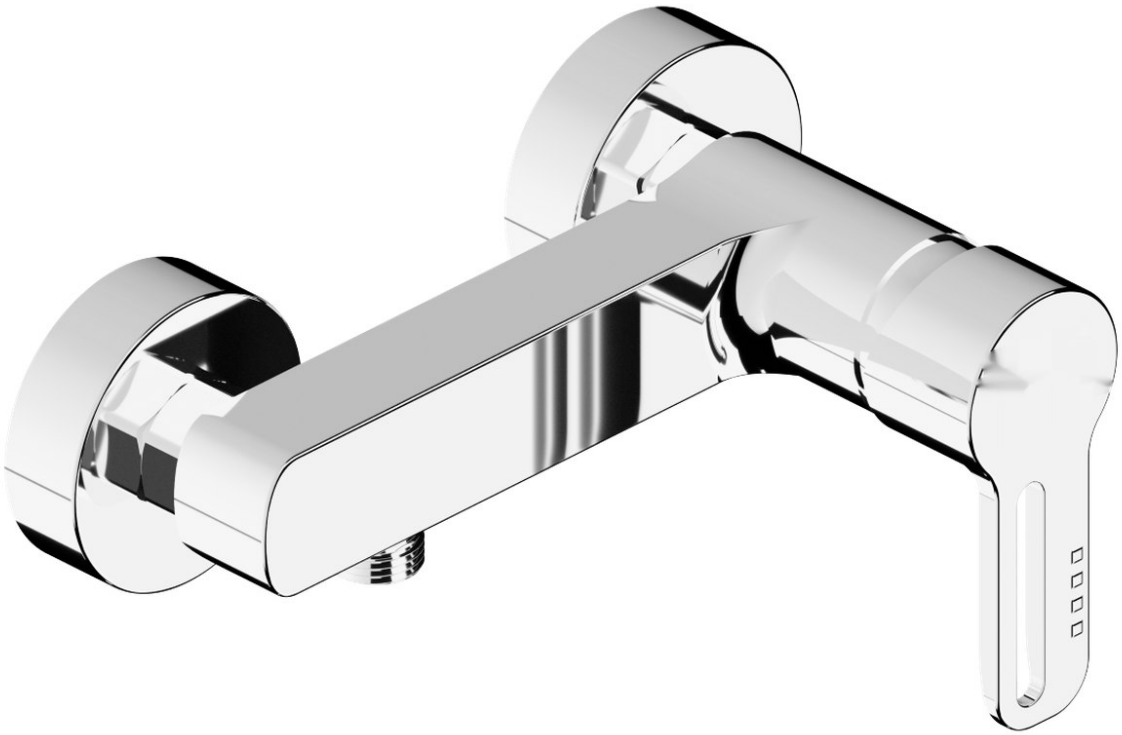

Chrome

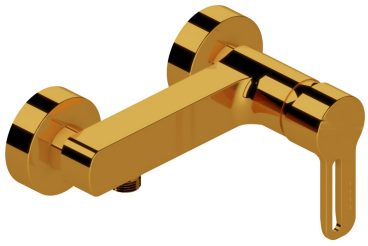

Gold

Confirm finish, quantity and destination with your quotation.

M2312 - MIX KEHRİBAR YÜKSEK LAVABO BATARYASI



Chrome

Confirm finish, quantity and destination with your quotation.

M2314 - MIX KEHRİBAR DUVARDAN EVYE BATARYASI



Chrome

Confirm finish, quantity and destination with your quotation.

M2501 - MIX KORAL BANYO BATARYASI

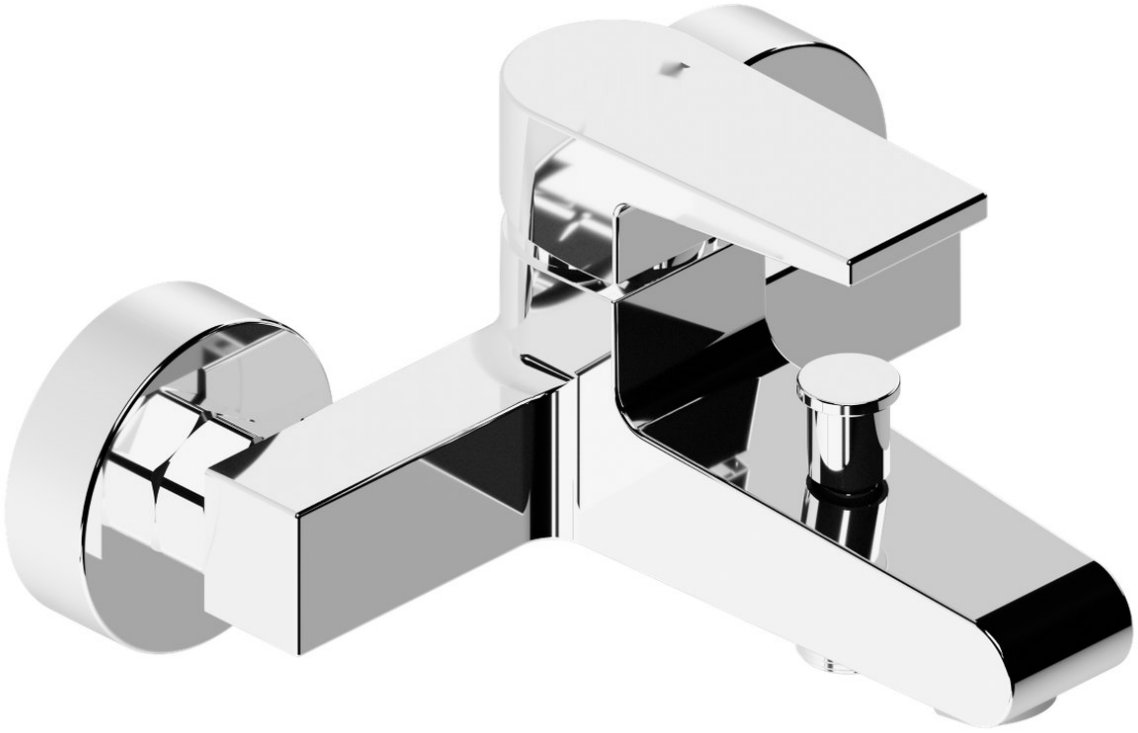

Chrome

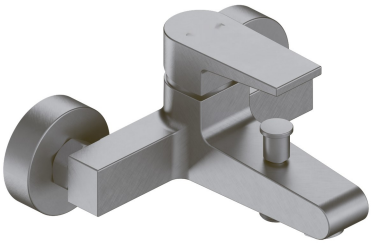

Satin



Black

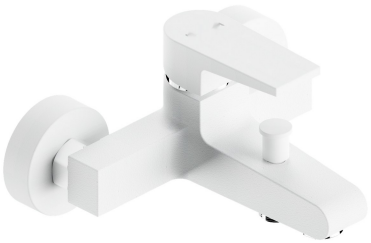

White

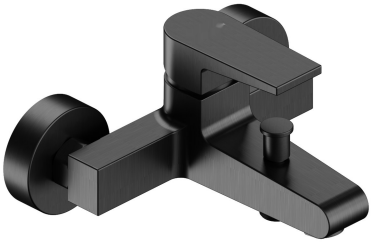

Anthracite

Confirm finish, quantity and destination with your quotation.

M2502 - MIX KORAL LAVABO BATARYASI



Chrome



Satin



Black



White



Anthracite

Confirm finish, quantity and destination with your quotation.

M2504 - MIX KORAL KUĞU EVYE BATARYASI



Chrome



Satin



Black



White



Anthracite

Confirm finish, quantity and destination with your quotation.

M2504.10 - MIX KORAL KUĞU EVYE BATARYASI 2



Chrome



Satin



White



Anthracite



Black

Confirm finish, quantity and destination with your quotation.

M2507 - MIX KORAL APLİKE EVYE BATARYASI



Chrome

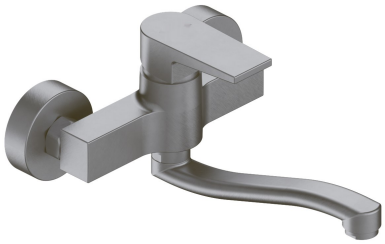

Satin



White



Black



Anthracite

Confirm finish, quantity and destination with your quotation.

M2508 - MIX KORAL DUŞ BATARYASI

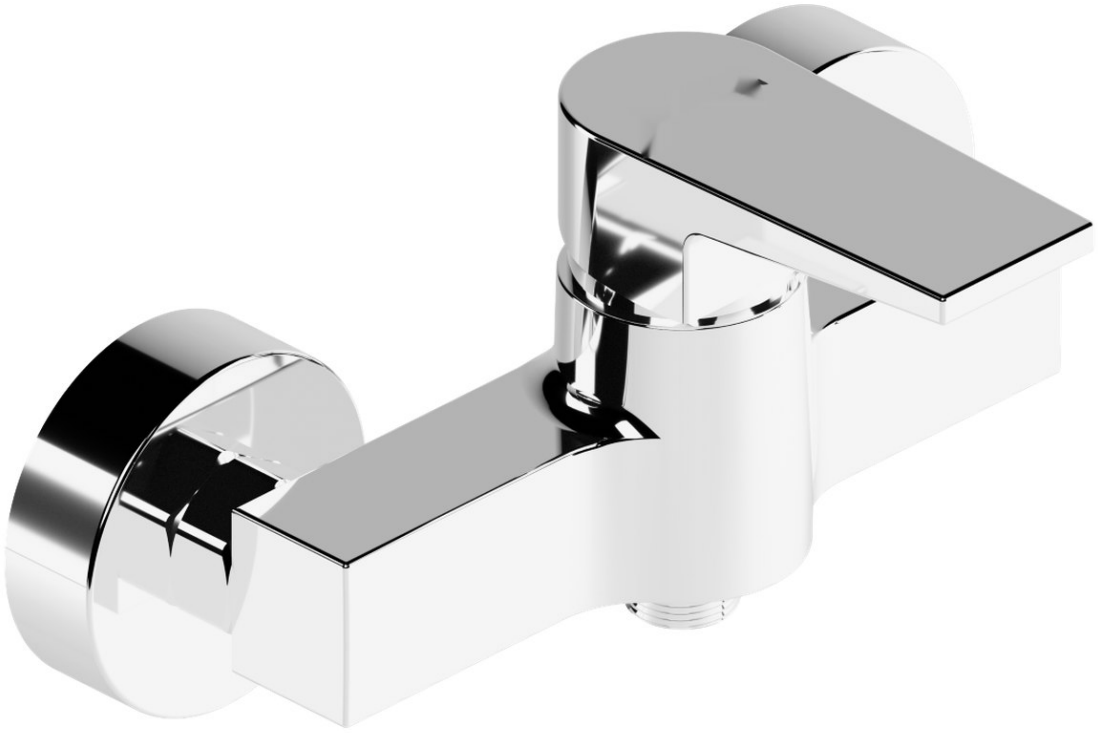

Chrome

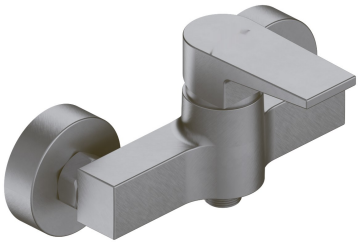

Satin



White



Black

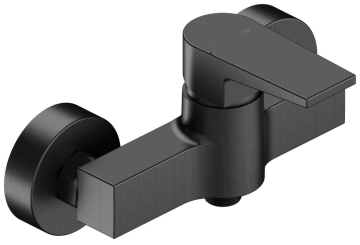

Anthracite

Confirm finish, quantity and destination with your quotation.

M2516 - MIX KORAL ÇANAK LAVABO BATARYASI



Chrome



Satin



Black



White



Anthracite

Confirm finish, quantity and destination with your quotation.

M1501 - MIX AKİK BANYO BATARYASI

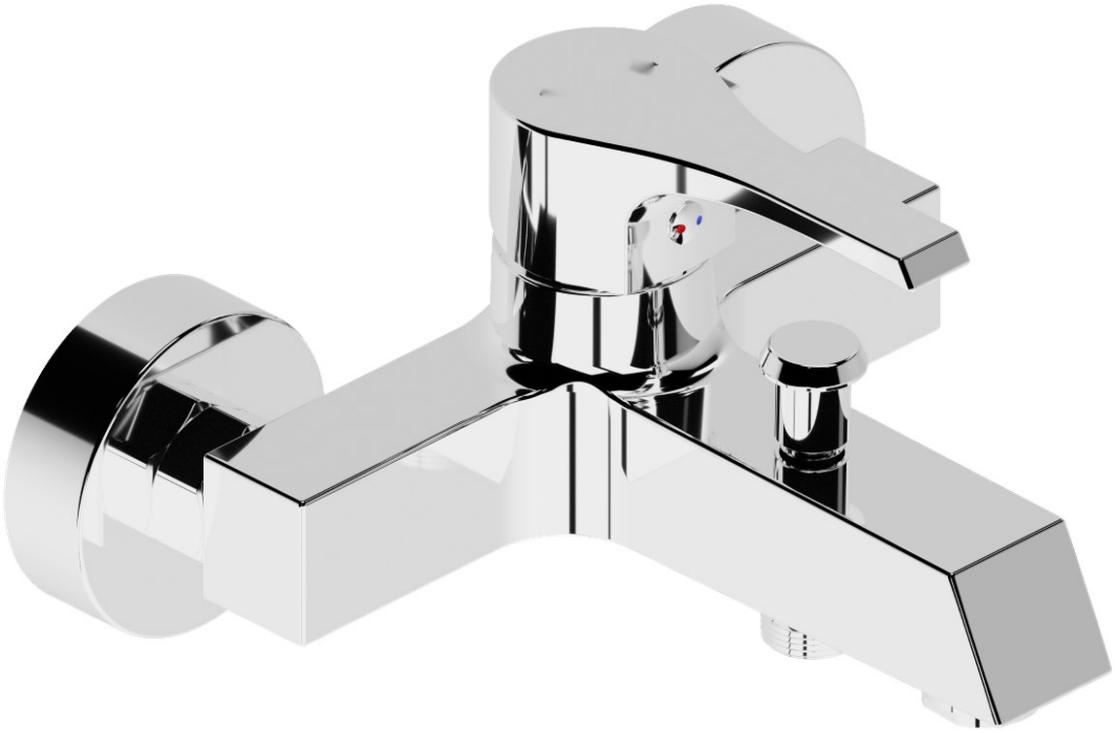

Chrome

Confirm finish, quantity and destination with your quotation.

M1502 - MIX AKİK LAVABO BATARYASI

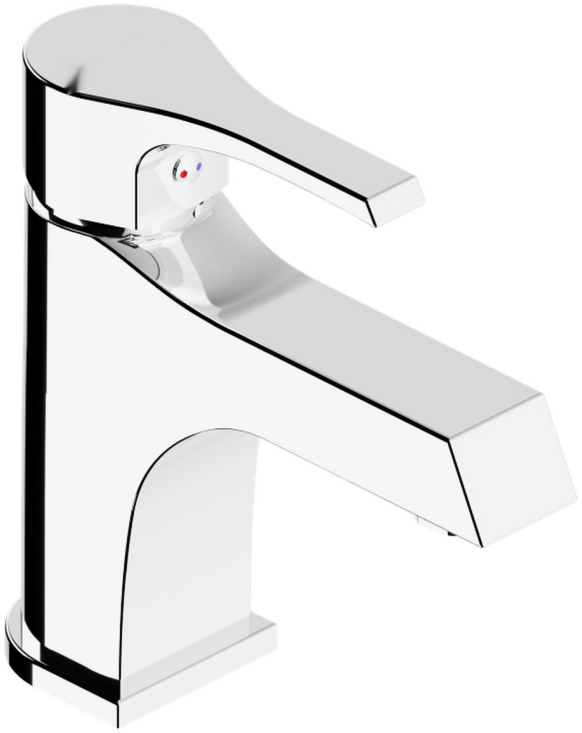

Chrome



Anthracite



Satin



Black



White

Confirm finish, quantity and destination with your quotation.

M1504 - MIX AKİK KUĞU EVYE BATARYASI



Chrome



Satin



White



Black



Anthracite

Confirm finish, quantity and destination with your quotation.

M1507 - MIX AKİK APLİKE EVYE BATARYASI

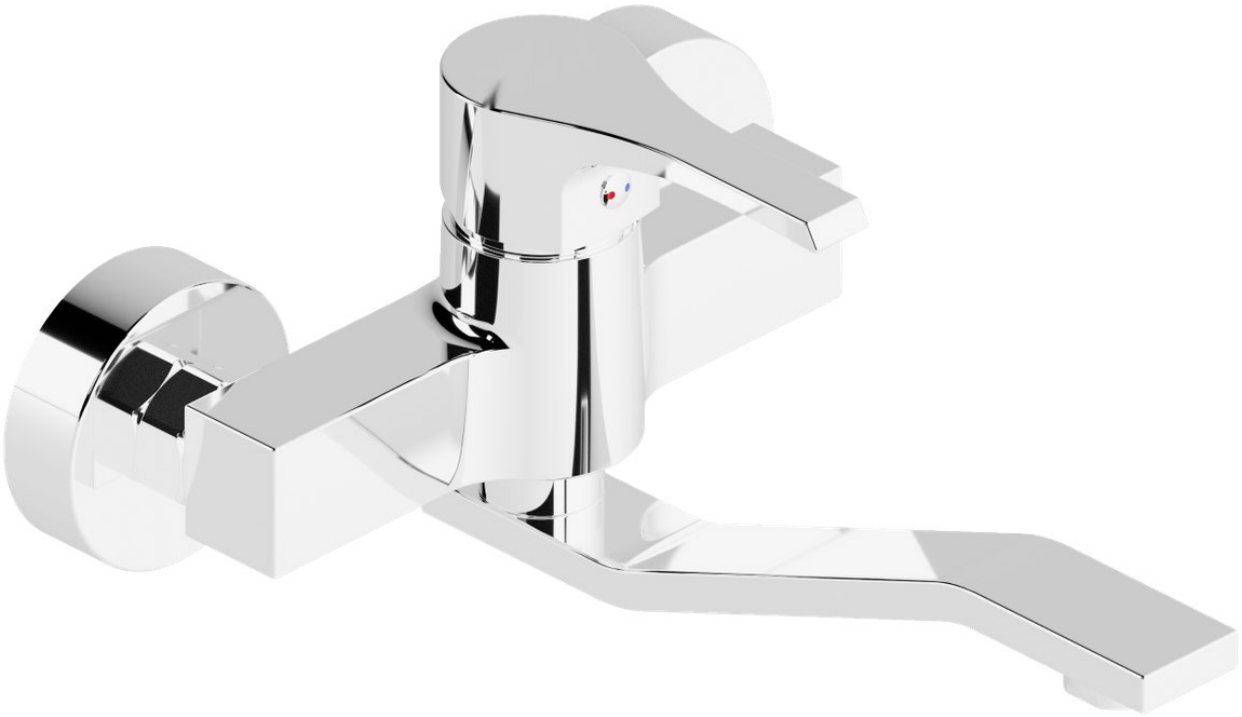

Chrome

Confirm finish, quantity and destination with your quotation.

M1508 - MIX AKİK DUŞ BATARYASI

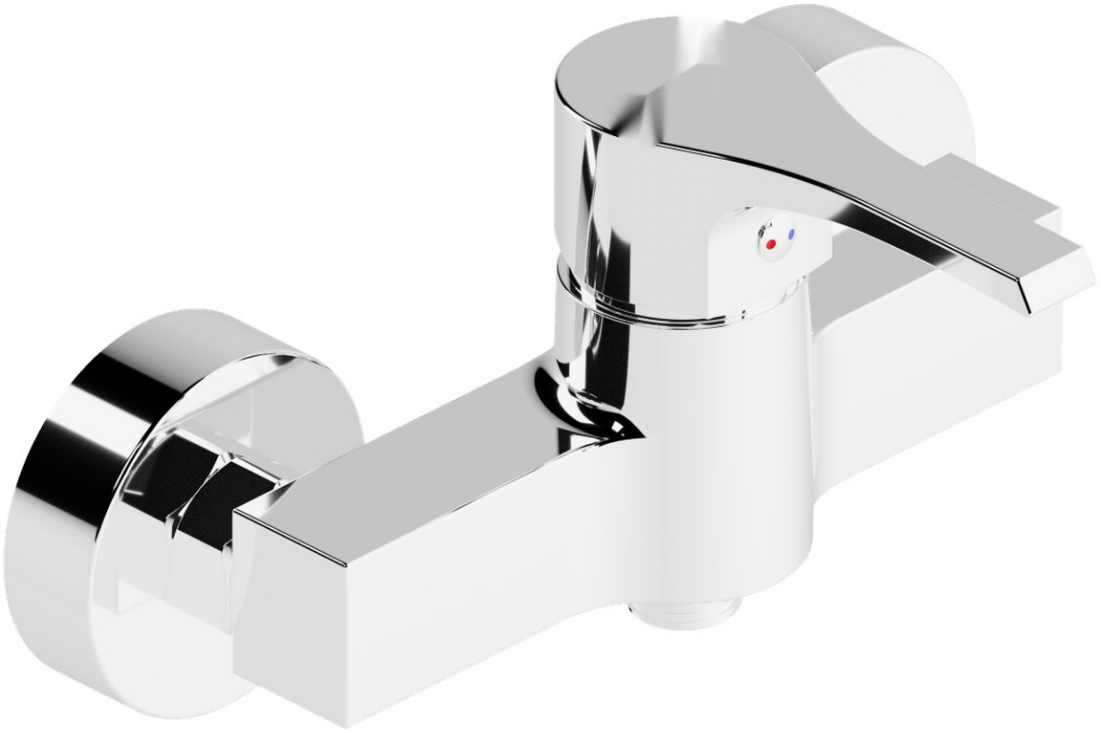

Chrome

Confirm finish, quantity and destination with your quotation.

M1401 - MIX GARNET BANYO BATARYASI



Chrome

Confirm finish, quantity and destination with your quotation.

M1402 - MIX GARNET LAVABO BATARYASI



Chrome

Confirm finish, quantity and destination with your quotation.

M1403.10 - MIX GARNET KUĞU LAVABO BATARYASI



Chrome

Confirm finish, quantity and destination with your quotation.

M1404.10 - MIX GARNET KUĞU EVYE BATARYASI 2



Chrome

Confirm finish, quantity and destination with your quotation.

M1404 - MIX GARNET KUĞU EVYE BATARYASI



Chrome

Confirm finish, quantity and destination with your quotation.

M1407 - MIX GARNET APLİKE EVYE BATARYASI



Chrome

Confirm finish, quantity and destination with your quotation.

M1408 - MIX GARNET DUŞ BATARYASI



Chrome

Confirm finish, quantity and destination with your quotation.

M1201 - MIX KUVARS BANYO BATARYASI

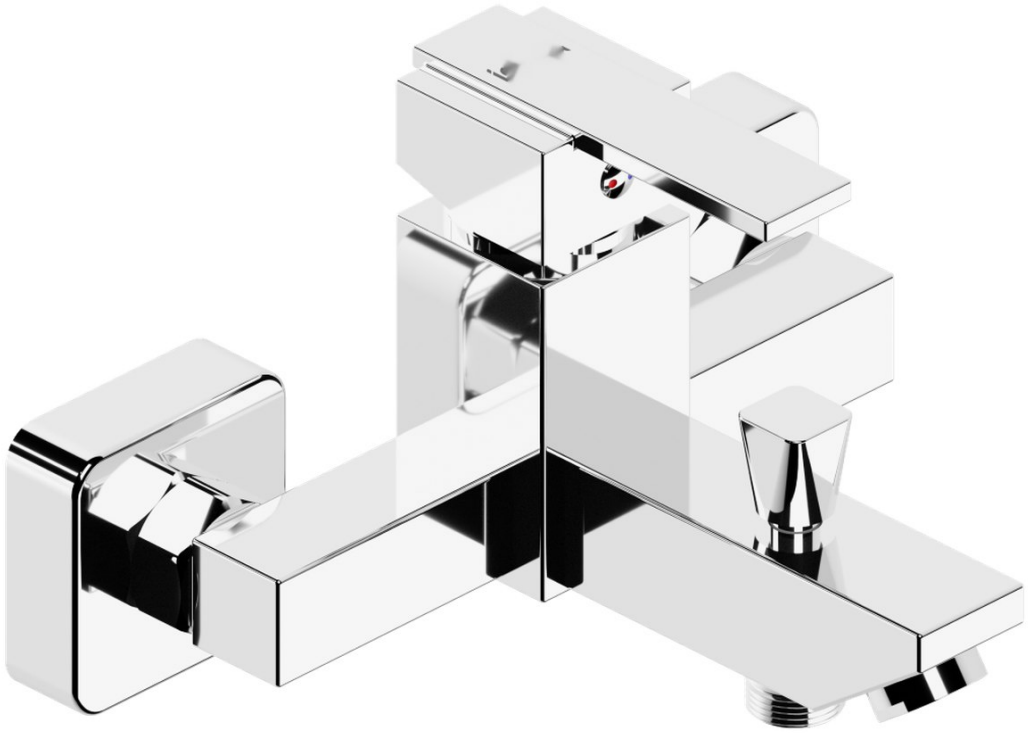

Chrome

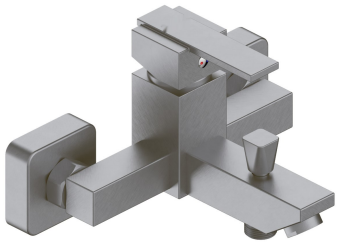

Satin

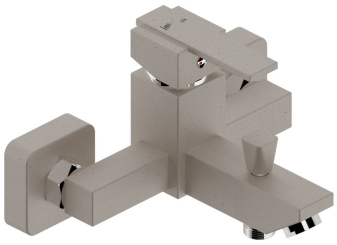

Beige granite

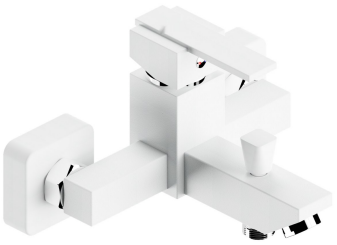

White



Black

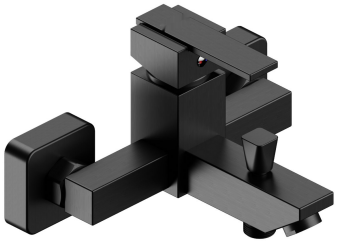

Anthracite

Confirm finish, quantity and destination with your quotation.

M1202 - MIX KUVARS LAVABO BATARYASI



Chrome



Black



White



Satin



Anthracite



Beige granite

Confirm finish, quantity and destination with your quotation.

M1204 - MIX KUVARS KUĞU EVYE BATARYASI



Chrome



Black

Confirm finish, quantity and destination with your quotation.

M1204.10 - MIX KUVARS KUĞU EVYE BATARYASI 2



Chrome



Anthracite



Black



Beige granite



Satin



White

Confirm finish, quantity and destination with your quotation.

M1207 - MIX KUVARS APLİKE EVYE BATARYASI

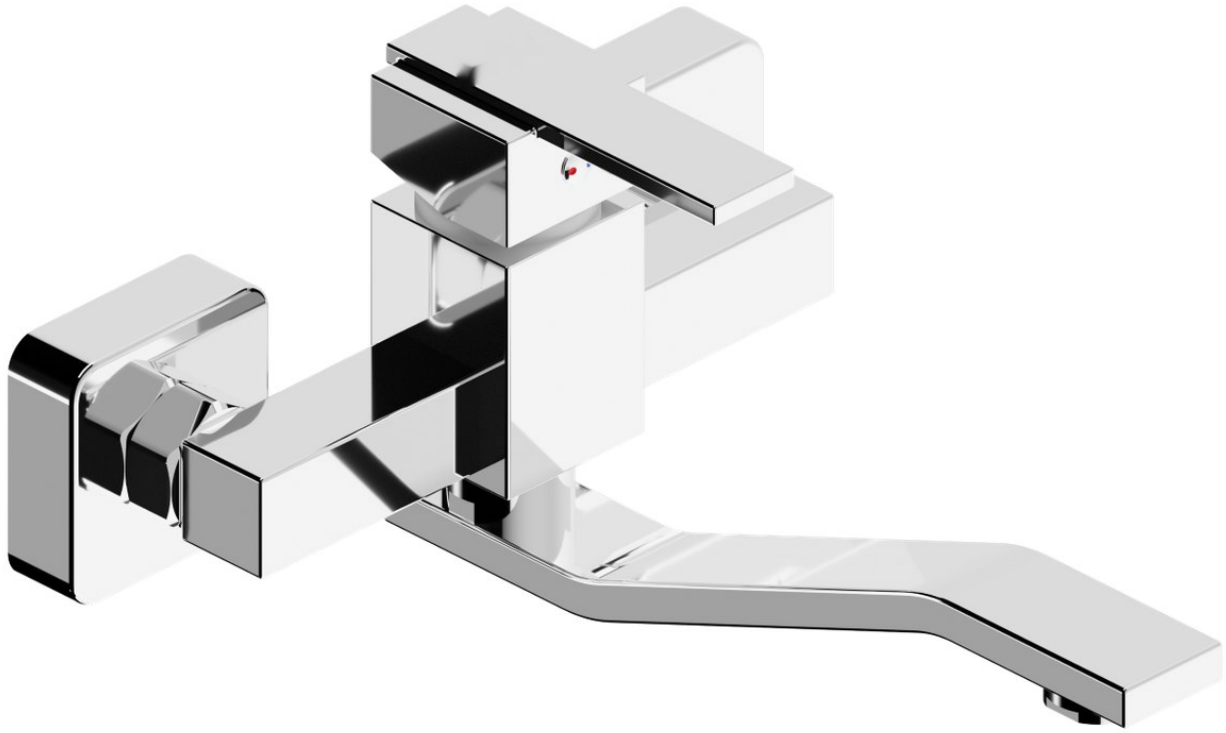

Chrome

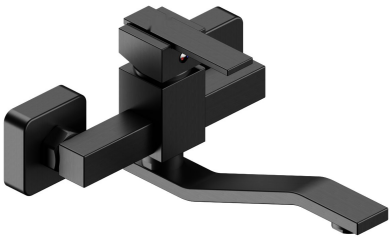

Anthracite



Black

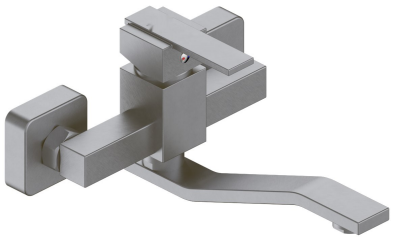

Satin

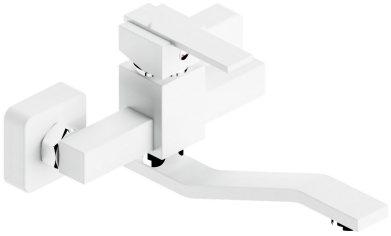

White

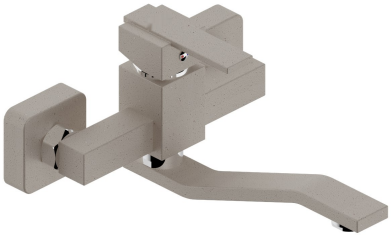

Beige granite

Confirm finish, quantity and destination with your quotation.

M1208 - MIX KUVARS DUŞ BATARYASI

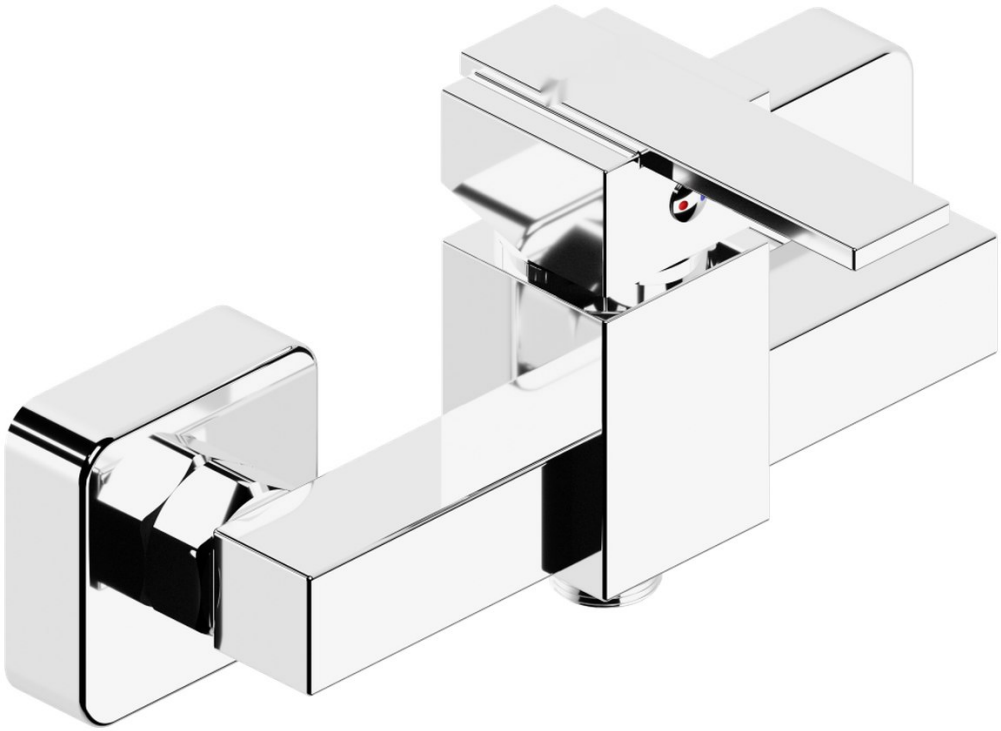

Chrome

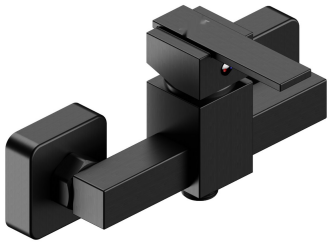

Anthracite

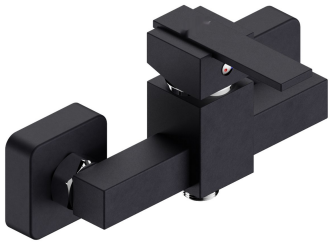

Black

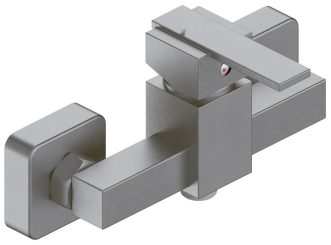

Satin



White

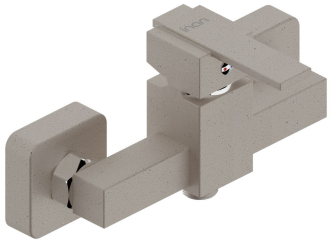

Beige granite

Confirm finish, quantity and destination with your quotation.

M1215 - MIX KUVARS BİDE BATARYASI

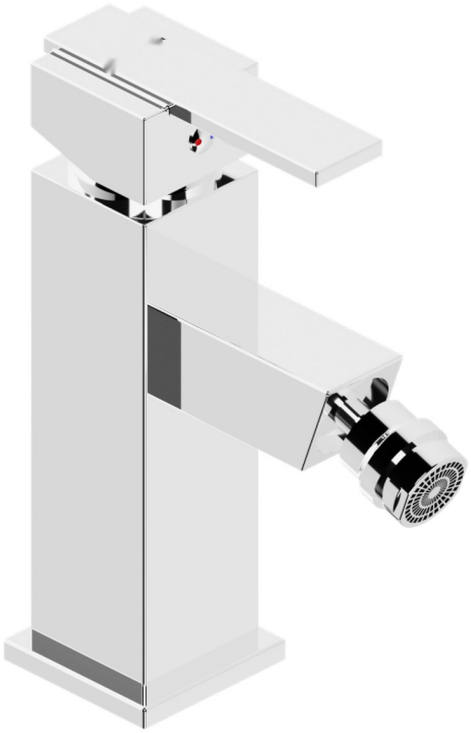

Chrome

Confirm finish, quantity and destination with your quotation.

M1216 - MIX KUVARS ÇANAK LAVABO BATARYASI



Chrome



Anthracite



Black



Beige granite



Satin



White

Confirm finish, quantity and destination with your quotation.

M1217 - MIX KUVARS HELEZONLU EVYE BATARYASI



Chrome



Anthracite



Black



Satin



White



Beige granite

Confirm finish, quantity and destination with your quotation.

M1219 - MIX KUVARS ŞATAF BATARYASI

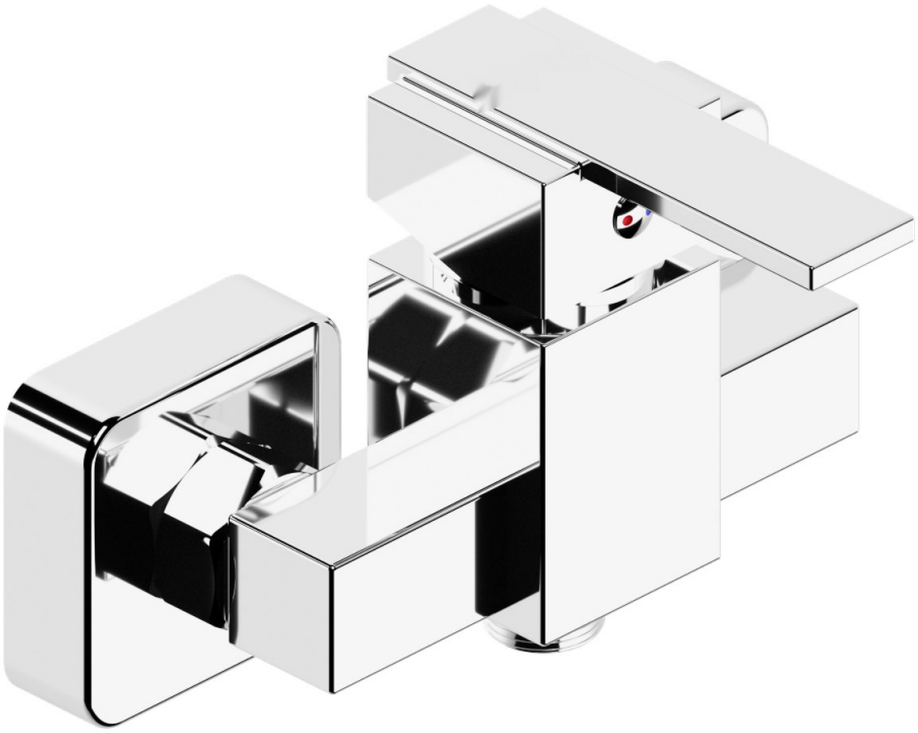

Chrome

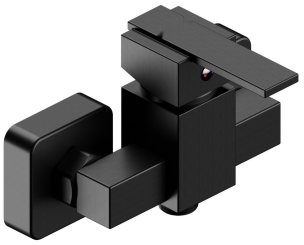

Anthracite



Black

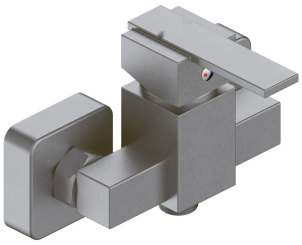

Satin



White

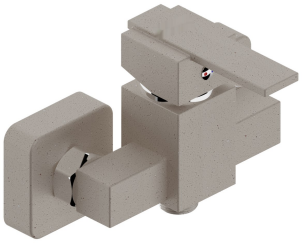

Beige granite

Confirm finish, quantity and destination with your quotation.

M2001 - MIX UZAY BANYO BATARYASI



Chrome



Black



Satin



White



Anthracite

Confirm finish, quantity and destination with your quotation.

M2002 - MIX UZAY LAVABO BATARYASI



Chrome



Black



Satin



White

Confirm finish, quantity and destination with your quotation.

M2003 - MIX UZAY KUĞU LAVABO BATARYASI



Chrome



Black



Satin



White

Confirm finish, quantity and destination with your quotation.

M2004 - MIX UZAY KUĞU EVYE BATARYASI



Chrome



Black



Satin



White

Confirm finish, quantity and destination with your quotation.

M2005 - MIX UZAY DÖNER LAVABO BATARYASI



Chrome



Black



Satin



White

Confirm finish, quantity and destination with your quotation.

M2007 - MIX UZAY APLİKE EVYE BATARYASI



Chrome



Black



Satin



White

Confirm finish, quantity and destination with your quotation.

M2008 - MIX UZAY DUŞ BATARYASI



Chrome



Black



Satin



White

Confirm finish, quantity and destination with your quotation.

M1301 - MIX TURKUAZ BANYO BATARYASI



Chrome

Confirm finish, quantity and destination with your quotation.

M1302 - MIX TURKUAZ LAVABO BATARYASI



Chrome

Confirm finish, quantity and destination with your quotation.

M1303 - MIX TURKUAZ KUĞU LAVABO BATARYASI



Chrome

Confirm finish, quantity and destination with your quotation.

M1304 - MIX TURKUAZ KUĞU EVYE BATARYASI



Chrome

Confirm finish, quantity and destination with your quotation.

M1307 - MIX TURKUAZ APLİKE EVYE BATARYASI



Chrome

Confirm finish, quantity and destination with your quotation.

M1308 - MIX TURKUAZ DUŞ BATARYASI



Chrome

Confirm finish, quantity and destination with your quotation.

M1312 - MIX TURKUAZ YÜKSEK LAVABO BATARYASI



Chrome

Confirm finish, quantity and destination with your quotation.

M1314 - MIX TURKUAZ DUVARDAN EVYE BATARYASI



Chrome

Confirm finish, quantity and destination with your quotation.

M2601 - MIX FLORİT BANYO BATARYASI

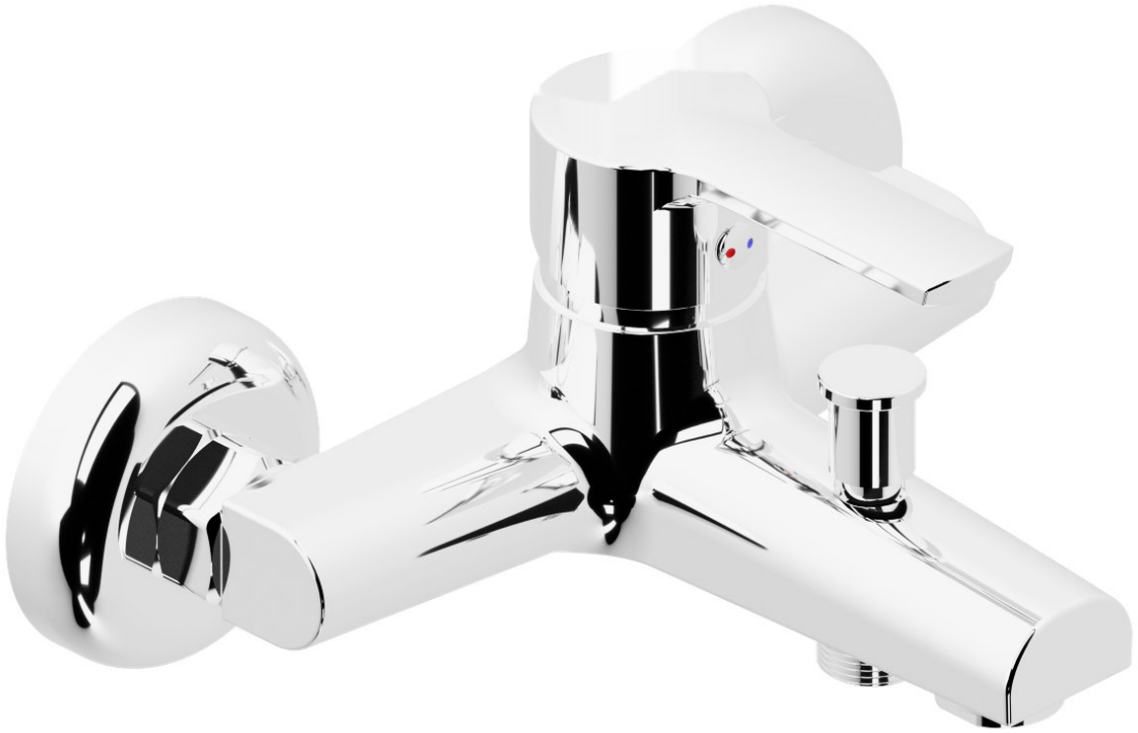

Chrome



Black

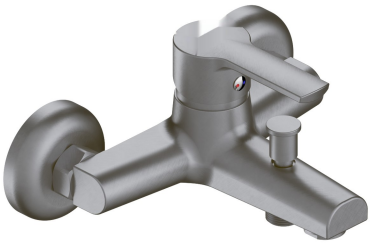

Satin



White

Confirm finish, quantity and destination with your quotation.

M2602 - MIX FLORİT LAVABO BATARYASI



Chrome



Black



Satin



White

Confirm finish, quantity and destination with your quotation.

M2603 - MIX FLORİT KUĞU LAVABO BATARYASI



Chrome



Black



Satin



White

Confirm finish, quantity and destination with your quotation.

M2604 - MIX FLORİT KUĞU EVYE BATARYASI



Chrome



Black



Satin



White

Confirm finish, quantity and destination with your quotation.

M2607 - MIX FLORİT APLİKE EVYE BATARYASI



Chrome



Black



Satin



White

Confirm finish, quantity and destination with your quotation.

M2608 - MIX FLORİT DUŞ BATARYASI



Chrome



Black

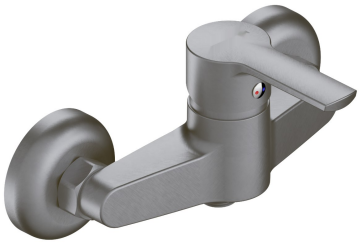

Satin



White

Confirm finish, quantity and destination with your quotation.

M2201 - MIX AY BANYO BATARYASI



Chrome

Confirm finish, quantity and destination with your quotation.

M2203 - MIX AY KUĞU LAVABO BATARYASI



Chrome

Confirm finish, quantity and destination with your quotation.

M2204 - MIX AY KUĞU EVYE BATARYASI



Chrome

Confirm finish, quantity and destination with your quotation.

M2207 - MIX AY APLİKE EVYE BATARYASI



Chrome

Confirm finish, quantity and destination with your quotation.

M2208 - MIX AY DUŞ BATARYASI



Chrome

Confirm finish, quantity and destination with your quotation.

M2212 - MIX AY YÜKSEK LAVABO BATARYASI



Chrome

Confirm finish, quantity and destination with your quotation.

M2214 - MIX AY DUVARDAN EVYE BATARYASI



Chrome

Confirm finish, quantity and destination with your quotation.

M2101 - MIX FEZA BANYO BATARYASI

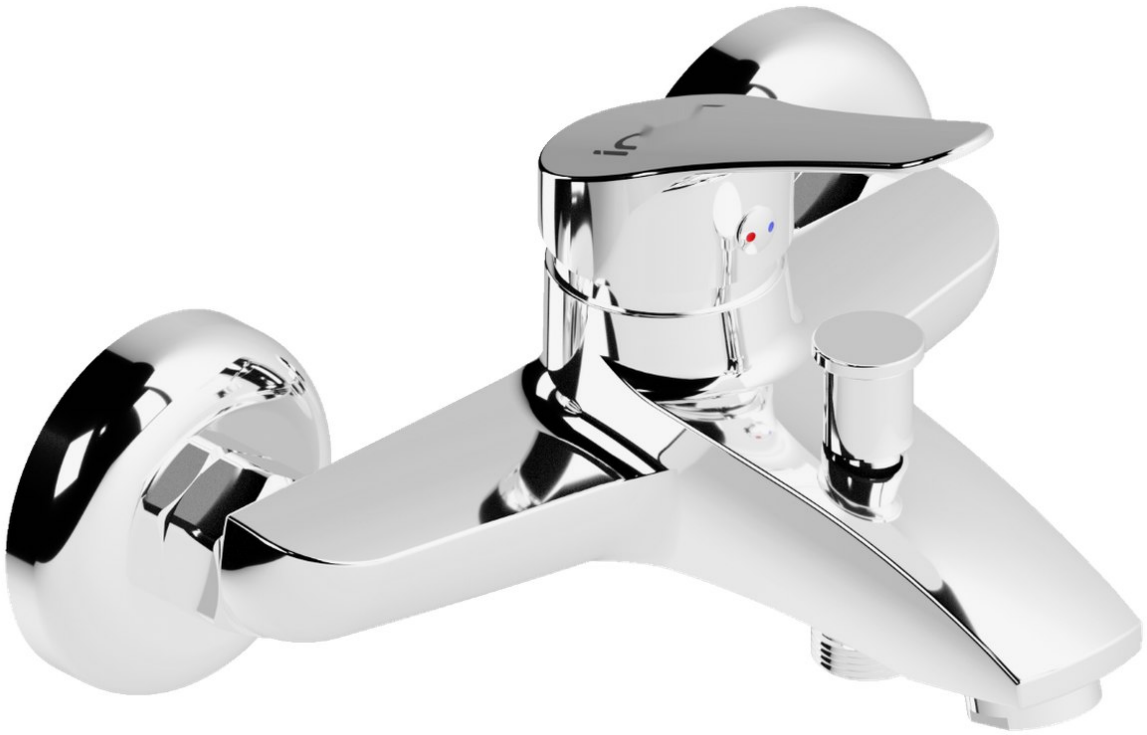

Chrome

Confirm finish, quantity and destination with your quotation.

M2102 - MIX FEZA LAVABO BATARYASI



Chrome

Confirm finish, quantity and destination with your quotation.

M2103 - MIX FEZA KUĞU LAVABO BATARYASI



Chrome

Confirm finish, quantity and destination with your quotation.

M2104 - MIX FEZA KUĞU EVYE BATARYASI



Chrome

Confirm finish, quantity and destination with your quotation.

M2107 - MIX FEZA APLİKE EVYE BATARYASI



Chrome

Confirm finish, quantity and destination with your quotation.

M2108 - MIX FEZA DUŞ BATARYASI



Chrome

Confirm finish, quantity and destination with your quotation.

M1101 - MIX YAKUT BANYO BATARYASI



Chrome



Beige granite

Confirm finish, quantity and destination with your quotation.

M1103 - MIX YAKUT KUĞU LAVABO BATARYASI



Chrome

Confirm finish, quantity and destination with your quotation.

M1104 - MIX YAKUT KUĞU EVYE BATARYASI



Chrome

Confirm finish, quantity and destination with your quotation.

M1107 - MIX YAKUT APLİKE EVYE BATARYASI



Chrome

Confirm finish, quantity and destination with your quotation.

M1108 - MIX YAKUT DUŞ BATARYASI



Chrome

Confirm finish, quantity and destination with your quotation.

M1112 - MIX YAKUT YÜKSEK LAVABO BATARYASI



Chrome

Confirm finish, quantity and destination with your quotation.

M1115 - MIX YAKUT BİDE BATARYASI



Chrome

Confirm finish, quantity and destination with your quotation.

M1116 - MIX YAKUT ÇANAK LAVABO BATARYASI



Chrome

Confirm finish, quantity and destination with your quotation.

M1801 - MIX OLTU BANYO BATARYASI



Chrome

Confirm finish, quantity and destination with your quotation.

M1802 - MIX OLTU LAVABO BATARYASI



Chrome

Confirm finish, quantity and destination with your quotation.

M1803 - MIX OLTU KUĞU LAVABO BATARYASI



Chrome

Confirm finish, quantity and destination with your quotation.

M1804 - MIX OLTU KUĞU EVYE BATARYASI



Chrome

Confirm finish, quantity and destination with your quotation.

M1805 - MIX OLTU DÖNER LAVABO BATARYASI



Chrome

Confirm finish, quantity and destination with your quotation.

M1806 - MIX OLTU DÖNER EVYE BATARYASI



Chrome

Confirm finish, quantity and destination with your quotation.

M1807 - MIX OLTU APLİKE EVYE BATARYASI



Chrome

Confirm finish, quantity and destination with your quotation.

M1808 - MIX OLTU DUŞ BATARYASI

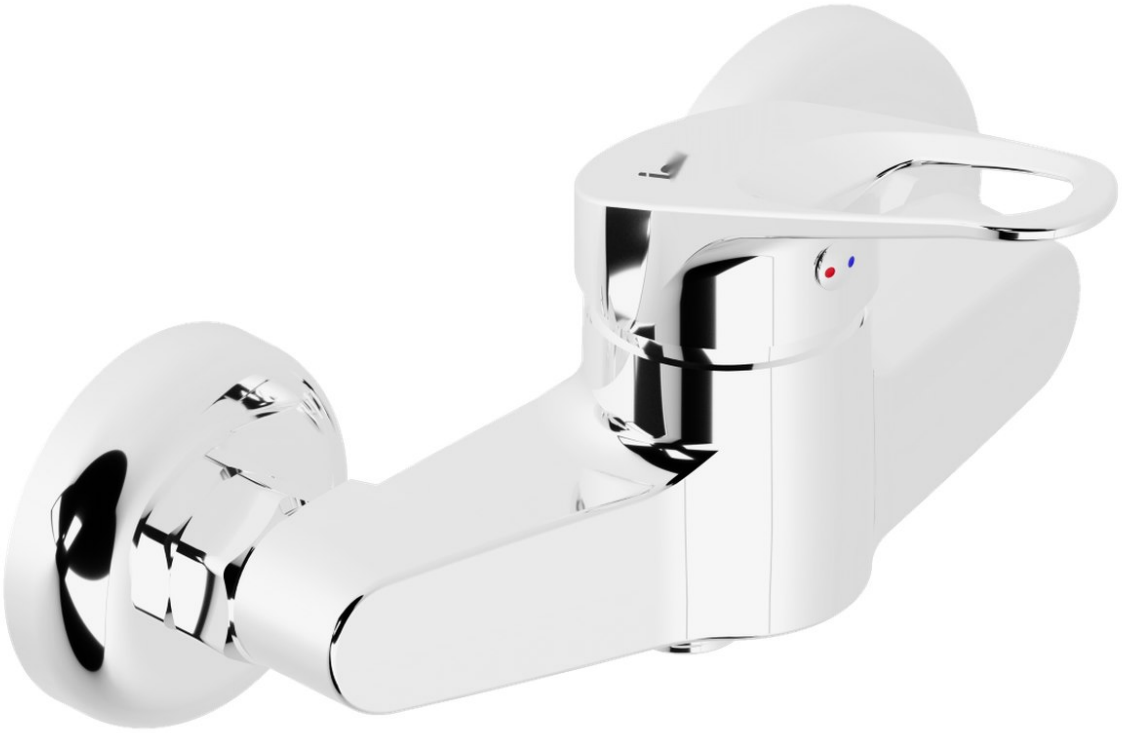

Chrome

Confirm finish, quantity and destination with your quotation.

M1812 - MIX OLTU YÜKSEK LAVABO BATARYASI



Chrome

Confirm finish, quantity and destination with your quotation.

M1814 - MIX OLTU DUVARDAN EVYE BATARYASI



Chrome

Confirm finish, quantity and destination with your quotation.

M1818 - MIX OLTU BERBER BATARYASI



Chrome

Confirm finish, quantity and destination with your quotation.

M1901 - MIX AMBER BANYO BATARYASI

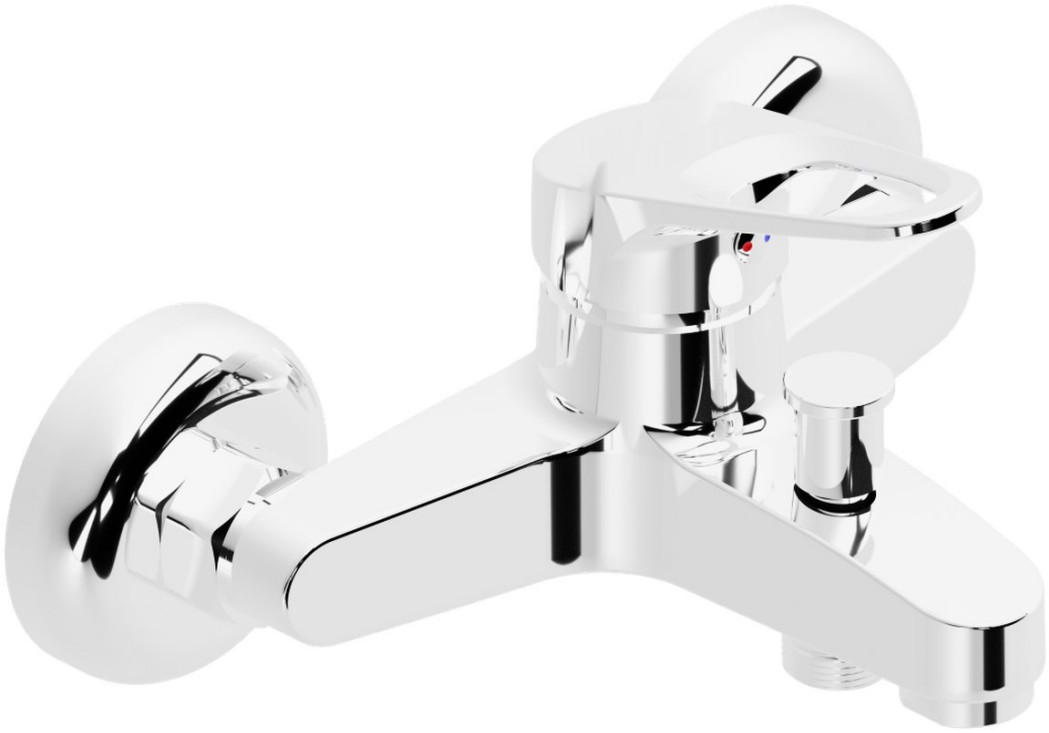

Chrome

Confirm finish, quantity and destination with your quotation.

M1902 - MIX AMBER LAVABO BATARYASI



Chrome

Confirm finish, quantity and destination with your quotation.

M1903 - MIX AMBER KUĞU LAVABO BATARYASI



Chrome

Confirm finish, quantity and destination with your quotation.

M1904 - MIX AMBER KUĞU EVYEBATARYASI



Chrome

Confirm finish, quantity and destination with your quotation.

M1905 - MIX AMBER DÖNER LAVABO BATARYASI



Chrome

Confirm finish, quantity and destination with your quotation.

M1906 - MIX AMBER DÖNER EVYE BATARYASI



Chrome

Confirm finish, quantity and destination with your quotation.

M1907 - MIX AMBER APLİKE EVYE BATARYASI



Chrome

Confirm finish, quantity and destination with your quotation.

M1908 - MIX AMBER DUŞ BATARYASI

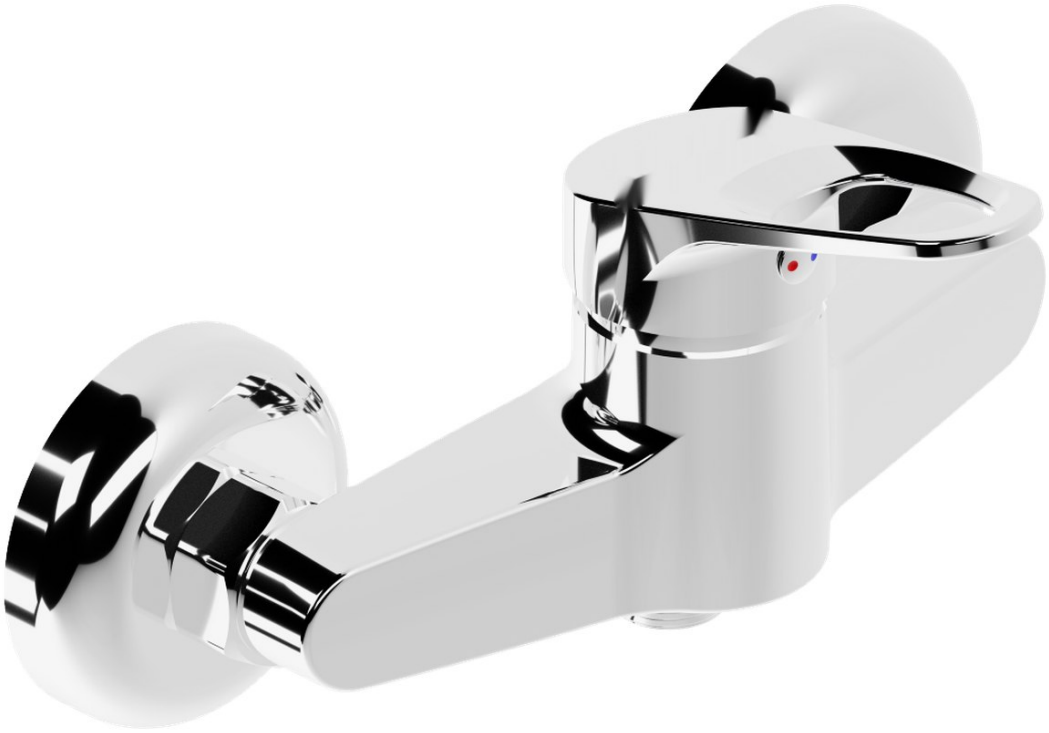

Chrome

Confirm finish, quantity and destination with your quotation.

M1912 - MIX AMBER YÜKSEK LAVABO BATARYASI



Chrome

Confirm finish, quantity and destination with your quotation.

M1919 - MIX AMBER ŞATAF BATARYASI



Chrome

Confirm finish, quantity and destination with your quotation.

M1001 - MIX YEŞİM BANYO BATARYASI



Chrome

Confirm finish, quantity and destination with your quotation.

M1002 - MIX YEŞİM LAVABO BATARYASI



Chrome

Confirm finish, quantity and destination with your quotation.

M1003 - MIX YEŞİM KUĞU LAVABO BATARYASI



Chrome

Confirm finish, quantity and destination with your quotation.

M1004 - MIX YEŞİM KUĞU EVYEBATARYASI



Chrome

Confirm finish, quantity and destination with your quotation.

M1007 - MIX YEŞİM APLİKE EVYE BATARYASI



Chrome

Confirm finish, quantity and destination with your quotation.

M1008 - MIX YEŞİM DUŞ BATARYASI

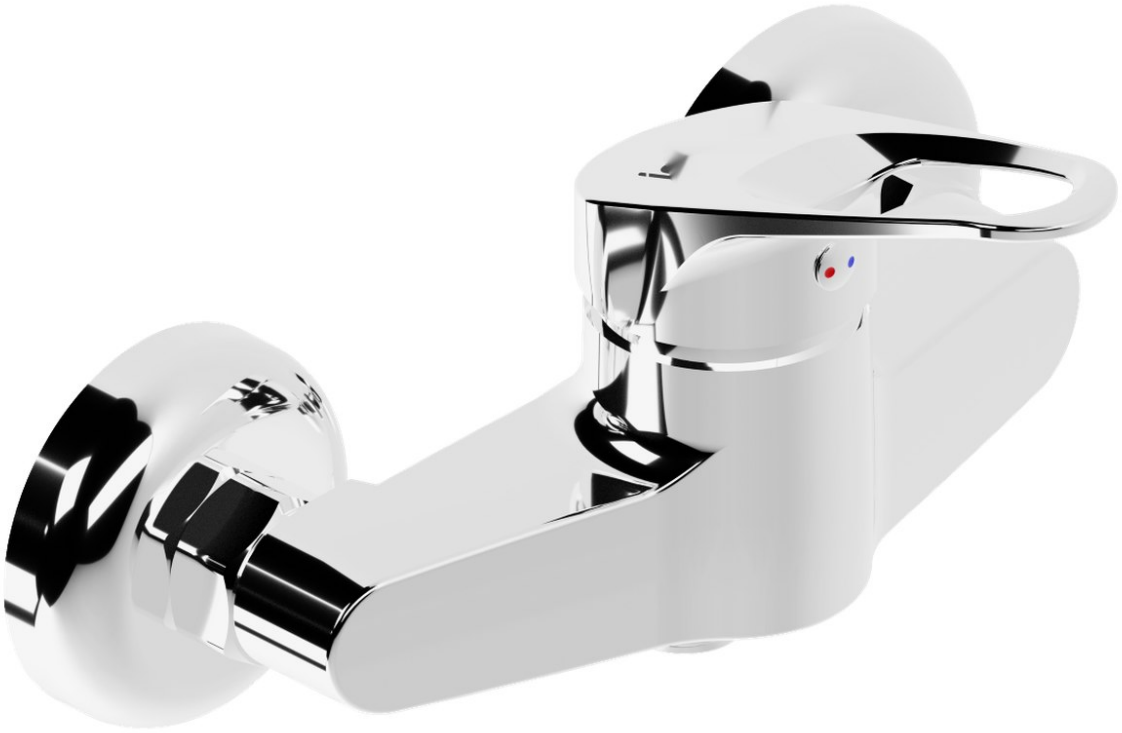

Chrome

Confirm finish, quantity and destination with your quotation.

M1601 - MIX İNCİ BANYO BATARYASI



Chrome

Confirm finish, quantity and destination with your quotation.

M1602 - MIX İNCİ LAVABO BATARYASI



Chrome

Confirm finish, quantity and destination with your quotation.

M1603 - MIX İNCİ KUĞU LAVABO BATARYASI



Chrome

Confirm finish, quantity and destination with your quotation.

M1604 - MIX İNCİ KUĞU EVYE BATARYASI



Chrome

Confirm finish, quantity and destination with your quotation.

M1607 - MIX İNCİ APLİKE EVYE BATARYASI



Chrome

Confirm finish, quantity and destination with your quotation.

M1608 - MIX İNCİ DUŞ BATARYASI

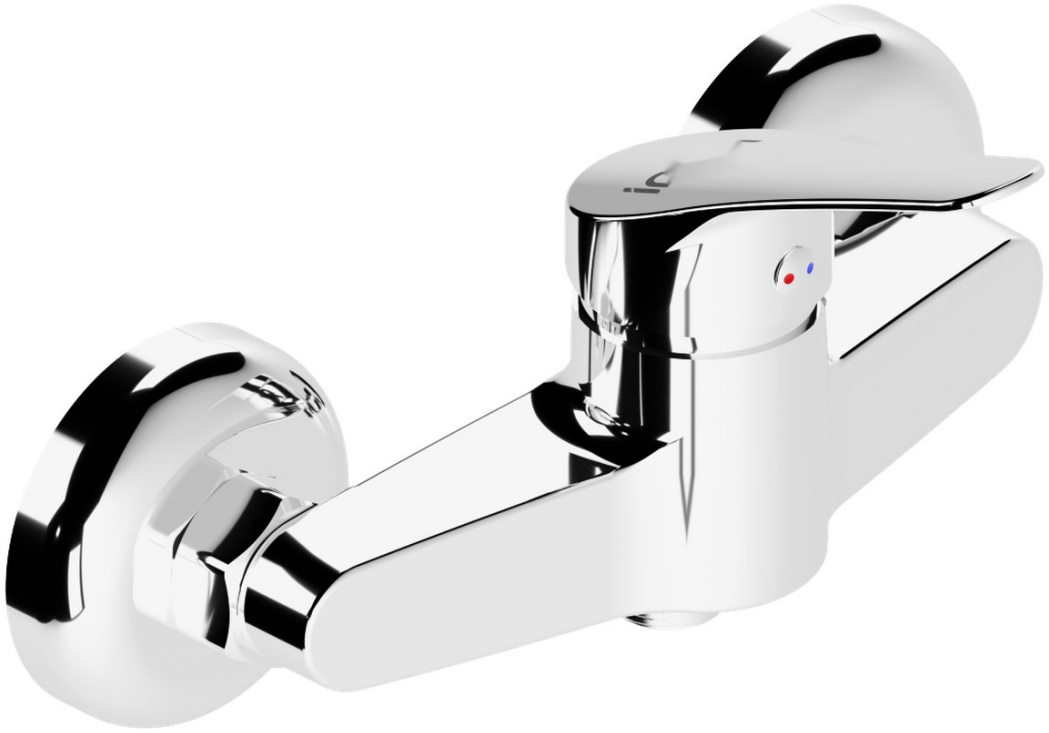

Chrome

Confirm finish, quantity and destination with your quotation.

M1612 - MIX İNCİYÜKSEK LAVABO BATARYASI



Chrome

Confirm finish, quantity and destination with your quotation.

M1619 - MIX İNCİ ŞATAF BATARYASI



Chrome

Confirm finish, quantity and destination with your quotation.

M0901 - MIX SAFİR BANYO BATARYASI



Chrome

Confirm finish, quantity and destination with your quotation.

M0902 - MIX SAFİR LAVABO BATARYASI



Chrome

Confirm finish, quantity and destination with your quotation.

M0903 - MIX SAFİR KUĞU LAVABO BATARYASI



Chrome

Confirm finish, quantity and destination with your quotation.

M0904 - MIX SAFİR KUĞU EVYE BATARYASI



Chrome

Confirm finish, quantity and destination with your quotation.

M0907 - MIX SAFİR APLİKE EVYE BATARYASI



Chrome

Confirm finish, quantity and destination with your quotation.

M0908 - MIX SAFİR DUŞ BATARYASI



Chrome

Confirm finish, quantity and destination with your quotation.

M0912 - MIX SAFİR YÜKSEK LAVABO BATARYASI



Chrome

Confirm finish, quantity and destination with your quotation.

M0919 - MIX SAFİR ŞATAF BATARYASI



Chrome

Confirm finish, quantity and destination with your quotation.

M1701 - MIX MERCAN BANYO BATARYASI



Chrome

Confirm finish, quantity and destination with your quotation.

M1702 - MIX MERCAN LAVABO BATARYASI



Chrome

Confirm finish, quantity and destination with your quotation.

M1703 - MIX MERCAN KUĞU LAVABO BATARYASI



Chrome

Confirm finish, quantity and destination with your quotation.

M1704 - MIX MERCAN KUĞU EVYE BATARYASI



Chrome

Confirm finish, quantity and destination with your quotation.

M1707 - MIX MERCAN APLİKE EVYE BATARYASI



Chrome

Confirm finish, quantity and destination with your quotation.

M1708 - MIX MERCAN DUŞ BATARYASI



Chrome

Confirm finish, quantity and destination with your quotation.

M1719 - MIX MERCAN ŞATAF BATARYASI



Chrome

Confirm finish, quantity and destination with your quotation.

M2805.101 - MIX SPİNEL DÖNER LAVABO BATARYASI 1



Chrome

Confirm finish, quantity and destination with your quotation.

M2805.102 - MIX SPİNEL DÖNER LAVABO BATARYASI 2



Chrome

Confirm finish, quantity and destination with your quotation.

M2805.103 - MIX SPİNEL DÖNER LAVABO BATARYASI 3



Chrome

Confirm finish, quantity and destination with your quotation.

M2805.211 - MIX SPİNEL DÖNER LAVABO BATARYASI 4



Chrome

Confirm finish, quantity and destination with your quotation.

M2805.212 - MIX SPİNEL DÖNER LAVABO BATARYASI 5



Chrome

Confirm finish, quantity and destination with your quotation.

M2805.213 - MIX SPİNEL DÖNER LAVABO BATARYASI 6



Chrome

Confirm finish, quantity and destination with your quotation.

M2702 - MIX MONO LAVABO BATARYASI



Chrome

Confirm finish, quantity and destination with your quotation.

M2704 - MIX MONO KUĞU EVYE BATARYASI



Chrome

Confirm finish, quantity and destination with your quotation.

M2709 - MIX MONO UZUN MUSLUK



Chrome

Confirm finish, quantity and destination with your quotation.

M2710 - MIX MONO MERMERÜSTÜ EVYE BATARYASI 1



Chrome

Confirm finish, quantity and destination with your quotation.

M2710.10 - MIX MONO MERMERÜSTÜ EVYE BATARYASI 2



Chrome

Confirm finish, quantity and destination with your quotation.

M2711 - MIX MONO MERMERÜSTÜ LAVABO BATARYASI



Chrome

Confirm finish, quantity and destination with your quotation.

M2714 - MIX MONO DUVARDAN EVYE BATARYASI



Chrome

Confirm finish, quantity and destination with your quotation.

M3017 - MIX LAPİS HELEZONLU EVYE BATARYASI



Chrome

Confirm finish, quantity and destination with your quotation.

M3120 - MIX TOPAZ ESNEK BORULU EVYE BATARYASI



Chrome

Confirm finish, quantity and destination with your quotation.

M3221 - MIX OPAL ARTMALI EVYE BATARYASI



Chrome

Confirm finish, quantity and destination with your quotation.

S0502 - FOTOSELLİ LÂL LAVABO BATARYASI



Chrome

Confirm finish, quantity and destination with your quotation.

S0622 - FOTOSELLİ TURMALİN LAVABO BATARYASI



Chrome

Confirm finish, quantity and destination with your quotation.

S0722 - FOTOSELLİ SİTRİN LAVABO BATARYASI



Chrome

Confirm finish, quantity and destination with your quotation.

S0317 - FOTOSELLİ KARE SIVA ALTI PİSUVAR BATARYASI



Chrome

Confirm finish, quantity and destination with your quotation.

S0416 - FOTOSELLİ YUVARLAK SIVA ÜSTÜ PİSUVAR BATARYASI



Chrome

Confirm finish, quantity and destination with your quotation.

K0620 - KLASİK YONCA BANYO BATARYASI

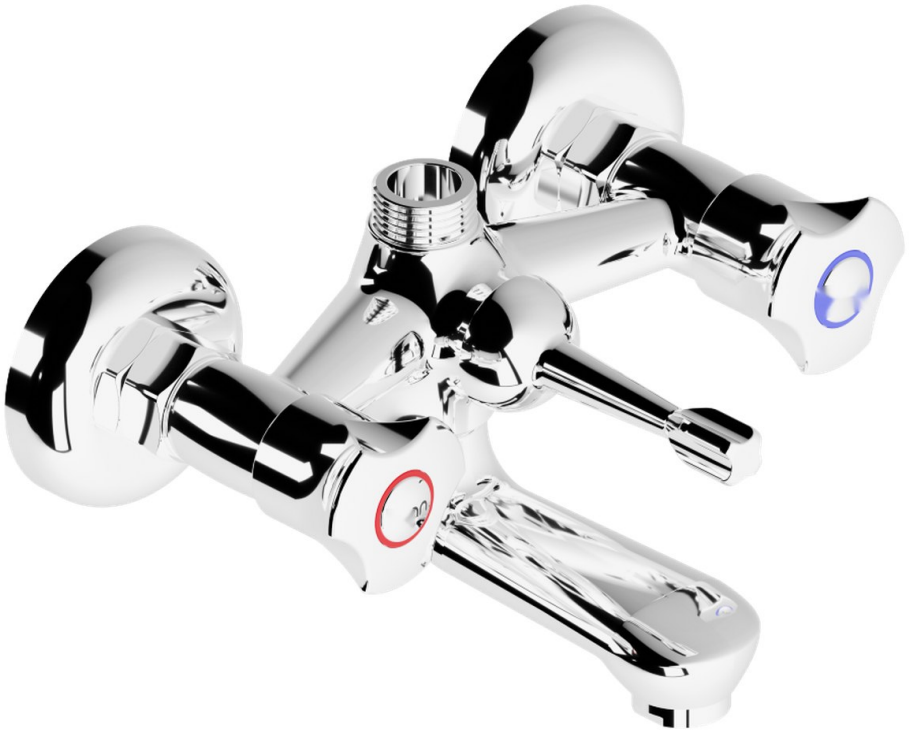

Chrome

Confirm finish, quantity and destination with your quotation.

K0622 - KLASİK YONCA KUĞU EVYE BATARYASI



Chrome

Confirm finish, quantity and destination with your quotation.

K0622.10 - KLASİK YONCA KUĞU EVYE BATARYASI 2



Chrome

Confirm finish, quantity and destination with your quotation.

K0623 - KLASİK YONCA DUVARDAN LAVABO BATARYASI



Chrome

Confirm finish, quantity and destination with your quotation.

K0624 - KLASİK YONCA DUVARDAN EVYE BATARYASI

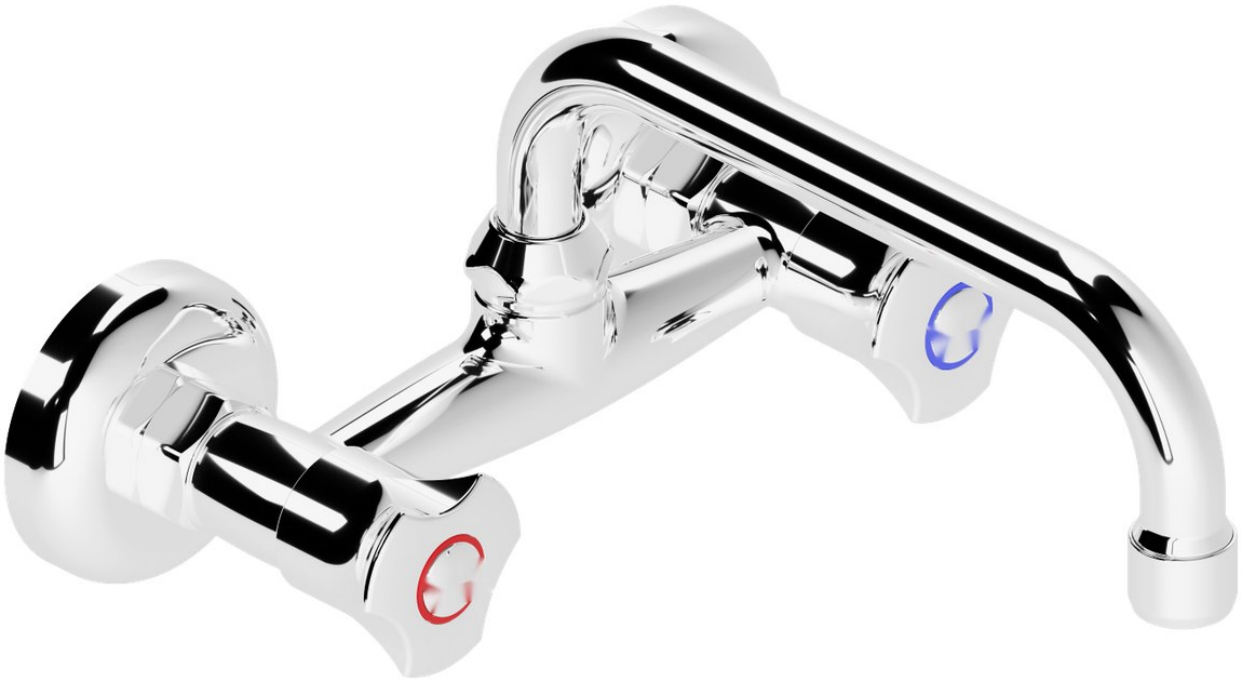

Chrome

Confirm finish, quantity and destination with your quotation.

K0624.10 - KLASİK YONCA DUVARDAN EVYE BATARYASI 2



Chrome

Confirm finish, quantity and destination with your quotation.

K0625 - KLASİK YONCA UZUN MUSLUK



Chrome

Confirm finish, quantity and destination with your quotation.

K0626 - KLASİK YONCA KISA MUSLUK



Chrome

Confirm finish, quantity and destination with your quotation.

K0627 - KLASİK YONCA ÇAMAŞIR MUSLUĞU

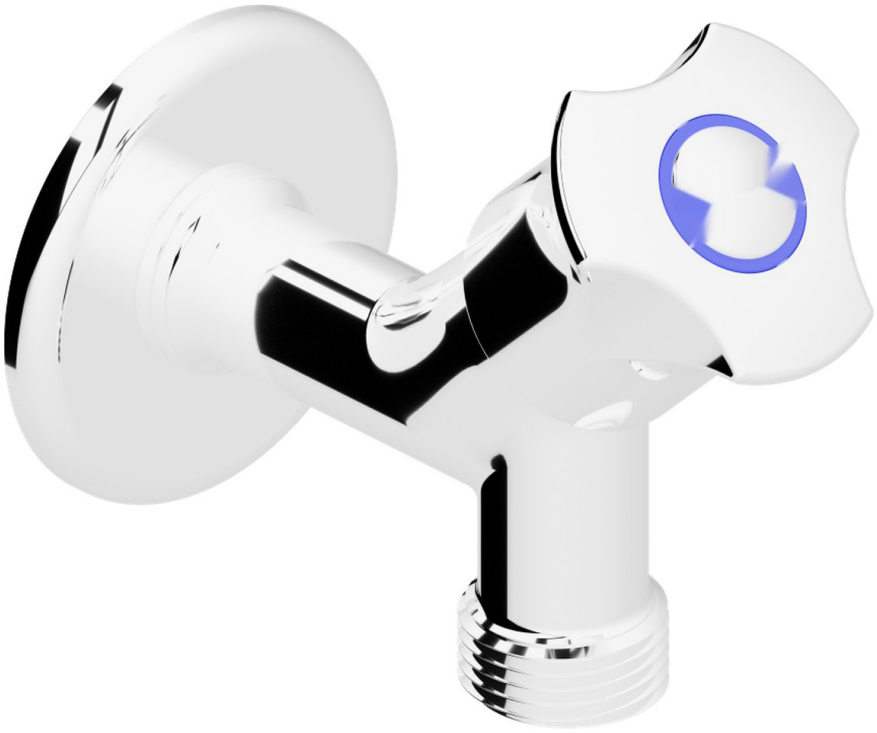

Chrome

Confirm finish, quantity and destination with your quotation.

K0628 - KLASİK YONCA UZUN MUSLUK AÇ KAPAT



Chrome

Confirm finish, quantity and destination with your quotation.

K0629 - KLASİK YONCA KISA MUSLUK AÇ KAPAT



Chrome

Confirm finish, quantity and destination with your quotation.

K0630 - KLASİK YONCA KÜRESEL BANYO BATARYASI



Chrome

Confirm finish, quantity and destination with your quotation.

K0631 - KLASİK YONCA MERMER ÜSTÜ EVYE BATARYASI



Chrome

Confirm finish, quantity and destination with your quotation.

K0634 - KLASİK YONCA KÖPRÜ EVYE BATARYASI



Chrome

Confirm finish, quantity and destination with your quotation.

K0635 - KLASİK YONCA KUĞU LAVABO BATARYASI



Chrome

Confirm finish, quantity and destination with your quotation.

K0640 - KLASİK YONCA VOLAN TAKIMI



Chrome

Confirm finish, quantity and destination with your quotation.

K0641 - KLASİK YONCA VOLAN TAKIMI AÇ KAPAT

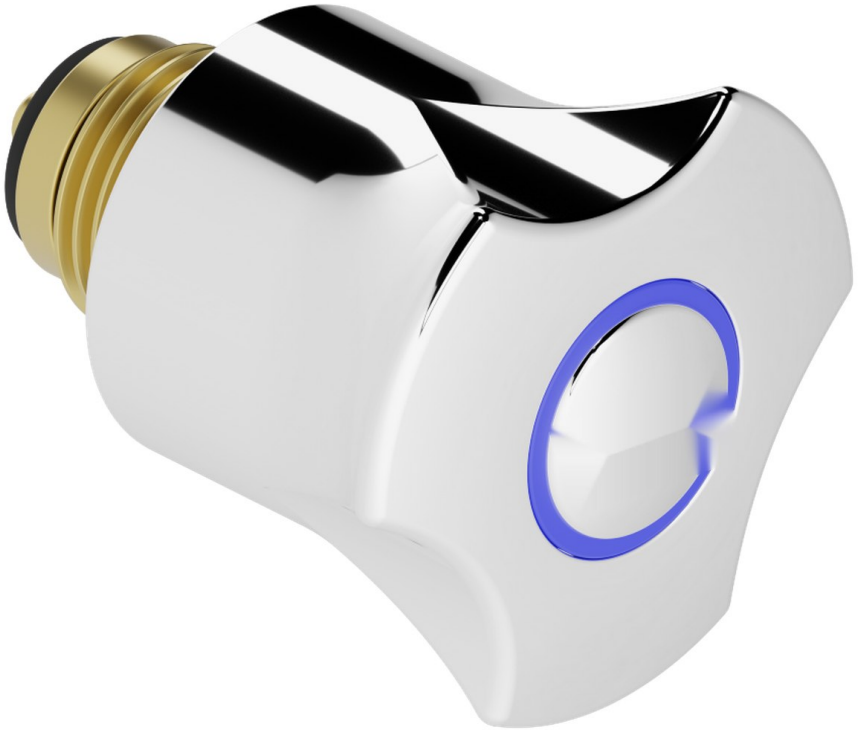

Chrome

Confirm finish, quantity and destination with your quotation.

K0642 - KLASİK YONCA ÇİFTLİ MUSLUK



Chrome

Confirm finish, quantity and destination with your quotation.

K0520 - KLASİK BEREN BANYO BATARYASI

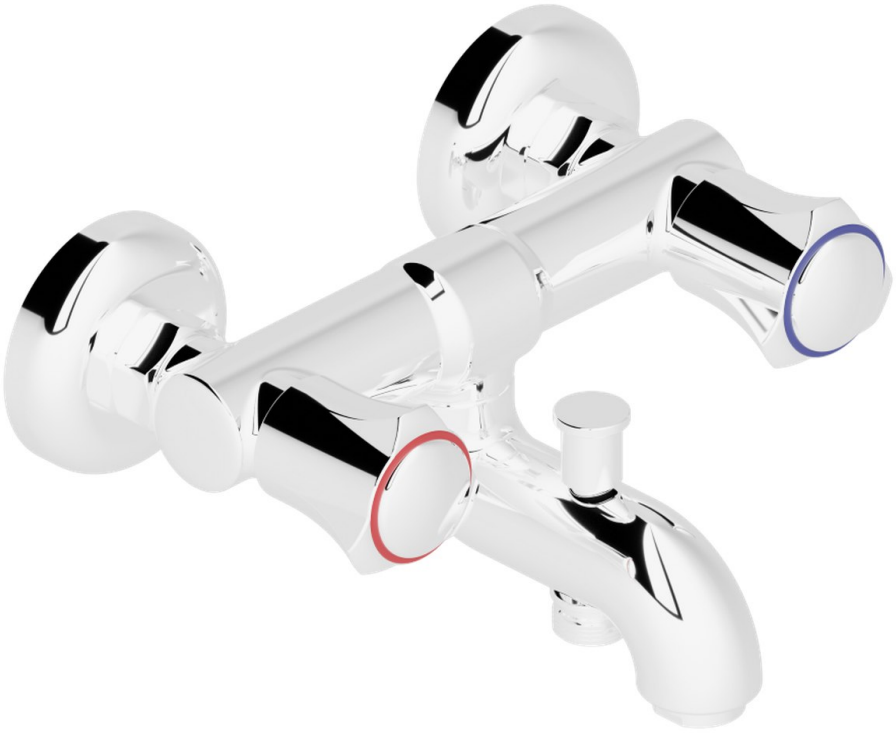

Chrome

Confirm finish, quantity and destination with your quotation.

K0522 - KLASİK BEREN KUĞU EVYE BATARYASI



Chrome

Confirm finish, quantity and destination with your quotation.

K0523 - KLASİK BEREN DUVARDAN LAVABO BATARYASI



Chrome

Confirm finish, quantity and destination with your quotation.

K0524 - KLASİK BEREN DUVARDAN EVYE BATARYASI



Chrome

Confirm finish, quantity and destination with your quotation.

K0525 - KLASİK BEREN UZUN MUSLUK



Chrome

Confirm finish, quantity and destination with your quotation.

K0526 - KLASİK BEREN KISA MUSLUK



Chrome

Confirm finish, quantity and destination with your quotation.

K0527 - KLASİK BEREN ÇAMAŞIR MUSLUĞU



Chrome

Confirm finish, quantity and destination with your quotation.

K0528 - KLASİK BEREN UZUN MUSLUK AÇ KAPAT



Chrome

Confirm finish, quantity and destination with your quotation.

K0529 - KLASİK BEREN KISA MUSLUK AÇ KAPAT



Chrome

Confirm finish, quantity and destination with your quotation.

K0531 - KLASİK BEREN MERMER ÜSTÜ EVYE BATARYASI



Chrome

Confirm finish, quantity and destination with your quotation.

K0532 - KLASİK BEREN DUVARDAN TEKLİ EVYE BATARYASI



Chrome

Confirm finish, quantity and destination with your quotation.

K0534 - KLASİK BEREN KÖPRÜ EVYE BATARYASI



Chrome

Confirm finish, quantity and destination with your quotation.

K0535 - KLASİK BEREN KUĞU LAVABO BATARYASI



Chrome

Confirm finish, quantity and destination with your quotation.

K0536 - KLASİK BEREN APLİKE EVYE BATARYASI

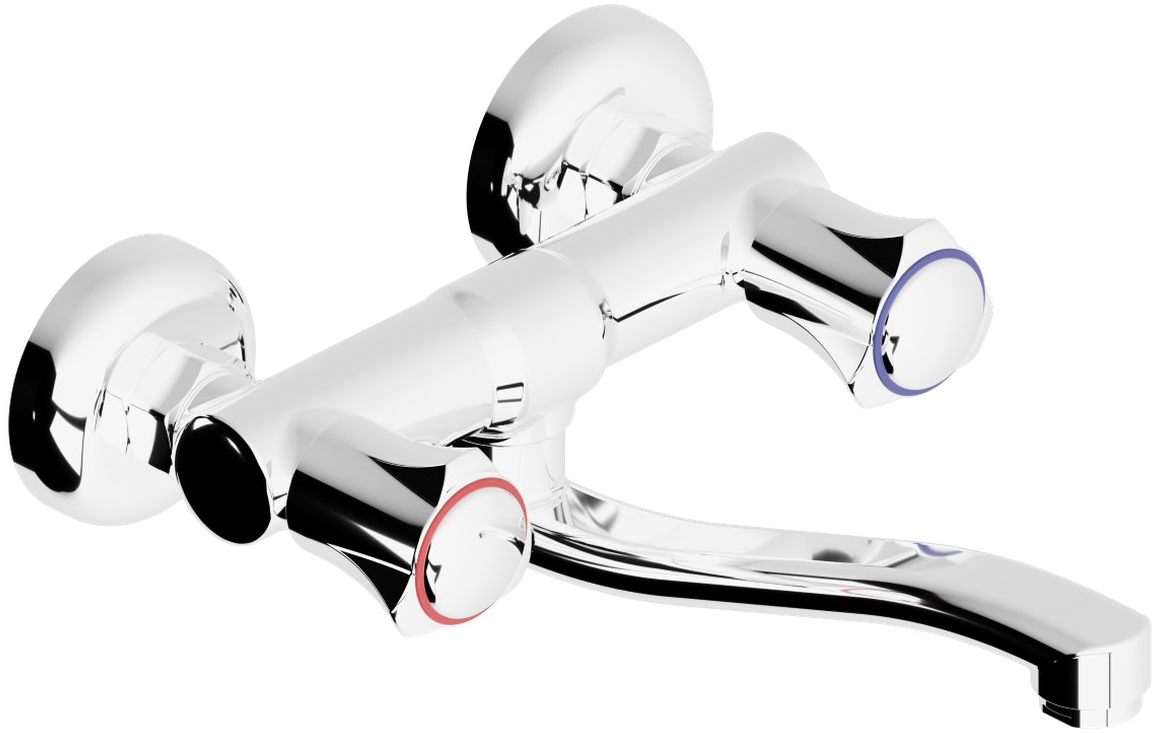

Chrome

Confirm finish, quantity and destination with your quotation.

K0540 - KLASİK BEREN VOLAN TAKIMI

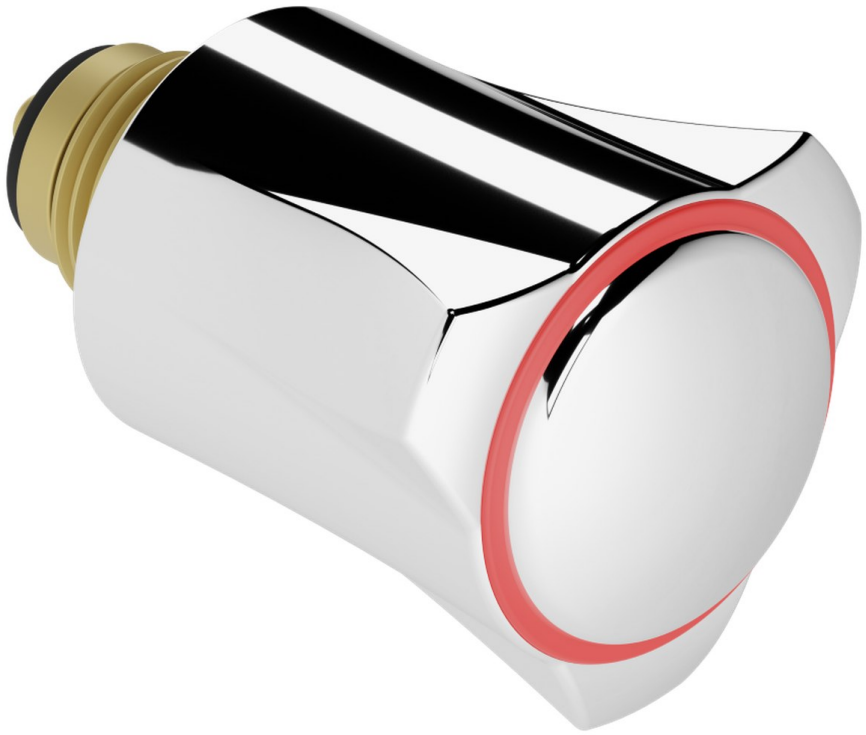

Chrome

Confirm finish, quantity and destination with your quotation.

K0541 - KLASİK BEREN VOLAN TAKIMI AÇ KAPAT

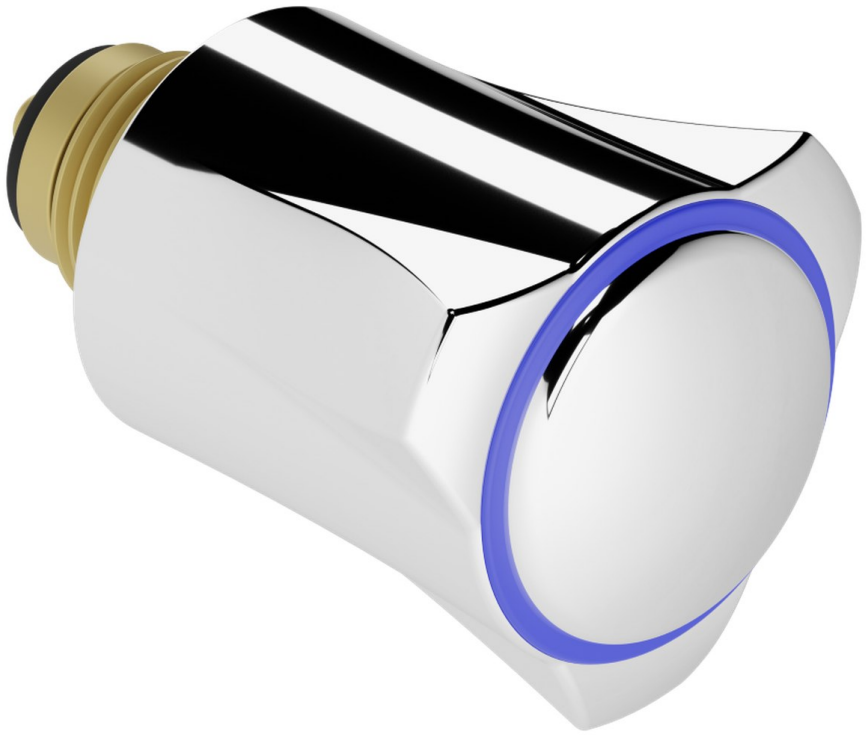

Chrome

Confirm finish, quantity and destination with your quotation.

K0542 - KLASİK BEREN ÇİFTLİ MUSLUK



Chrome

Confirm finish, quantity and destination with your quotation.

K0420 - KLASİK PİRAMİT BANYO BATARYASI



Chrome

Confirm finish, quantity and destination with your quotation.

K0422 - KLASİK PİRAMİT KUĞU EVYE BATARYASI



Chrome

Confirm finish, quantity and destination with your quotation.

K0422.10 - KLASİK PİRAMİT KUĞU EVYE BATARYASI 2



Chrome

Confirm finish, quantity and destination with your quotation.

K0423 - KLASİK PİRAMİT DUVARDAN LAVABO BATARYASI



Chrome

Confirm finish, quantity and destination with your quotation.

K0424 - KLASİK PİRAMİT DUVARDAN EVYE BATARYASI



Chrome

Confirm finish, quantity and destination with your quotation.

K0424.10 - KLASİK PİRAMİT DUVARDAN EVYE BATARYASI 2



Chrome

Confirm finish, quantity and destination with your quotation.

K0425 - KLASİK PİRAMİT UZUN MUSLUK



Chrome

Confirm finish, quantity and destination with your quotation.

K0426 - KLASİK PİRAMİT KISA MUSLUK



Chrome

Confirm finish, quantity and destination with your quotation.

K0427 - KLASİK PİRAMİT ÇAMAŞIR MUSLUĞU



Chrome

Confirm finish, quantity and destination with your quotation.

K0428 - KLASİK PİRAMİT UZUN MUSLUK AÇ KAPAT



Chrome

Confirm finish, quantity and destination with your quotation.

K0429 - KLASİK PİRAMİT KISA MUSLUK AÇ KAPAT



Chrome

Confirm finish, quantity and destination with your quotation.

K0430 - KLASİK PİRAMİT KÜRESEL BANYO BATARYASI



Chrome

Confirm finish, quantity and destination with your quotation.

K0431 - KLASİK PİRAMİT MERMER ÜSTÜ EVYE BATARYASI



Chrome

Confirm finish, quantity and destination with your quotation.

CARBOGA

Classic taps / PİRAMİT

K0433 - KLASİK PİRAMİT DUVARDAN SABİT EVYE BATARYASI



Chrome

Confirm finish, quantity and destination with your quotation.

K0434 - KLASİK PİRAMİT KÖPRÜ EVYE BATARYASI



Chrome

Confirm finish, quantity and destination with your quotation.

K0435 - KLASİK PİRAMİT KUĞU LAVABO BATARYASI



Chrome

Confirm finish, quantity and destination with your quotation.

K0440 - KLASİK PİRAMİT VOLAN TAKIMI



Chrome

Confirm finish, quantity and destination with your quotation.

K0441 - KLASİK PİRAMİT VOLAN TAKIMI AÇ KAPAT



Chrome

Confirm finish, quantity and destination with your quotation.

K0442 - KLASİK PİRAMİT ÇİFTLİ MUSLUK



Chrome

Confirm finish, quantity and destination with your quotation.

A0263 - ARA MUSLUK GÜMÜŞ - OMEGA 1/2" - 1/2"



Chrome

Confirm finish, quantity and destination with your quotation.

A0264 - ARA MUSLUK GÜMÜŞ - OMEGA 1/2" - 1/2" AÇ KAPAT



Chrome

Confirm finish, quantity and destination with your quotation.

A0355 - ARA MUSLUK TUNÇ - TETA 1/2" - 1/2"



Chrome

Confirm finish, quantity and destination with your quotation.

A0356 - ARA MUSLUK TUNÇ - TETA 1/2" - 1/2" AÇ KAPAT



Chrome

Confirm finish, quantity and destination with your quotation.

A0563 - ARA MUSLUK BEREN - OMEGA 1/2" - 1/2"



Chrome

Confirm finish, quantity and destination with your quotation.

A0564 - ARA MUSLUK BEREN - OMEGA 1/2" - 1/2" AÇ KAPAT



Chrome

Confirm finish, quantity and destination with your quotation.

A0663 - ARA MUSLUK YONCA - OMEGA 1/2" - 1/2"



Chrome

Confirm finish, quantity and destination with your quotation.

A0664 - ARA MUSLUK YONCA - OMEGA 1/2" - 1/2" AÇ KAPAT



Chrome

Confirm finish, quantity and destination with your quotation.

A5462 - ARA MUSLUK GEO FİLİTRELİ 1/2"

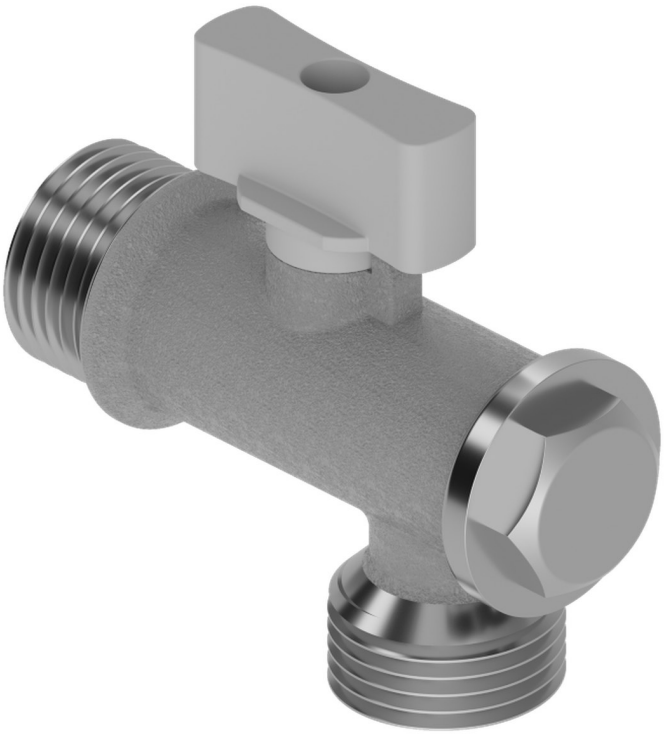

Chrome

Confirm finish, quantity and destination with your quotation.

A5559 - ARA MUSLUK TRİ - GAMA 1/2" - M12



Chrome

Confirm finish, quantity and destination with your quotation.

U2510 - UZATMA 25 ÇAP 1 CM.



Chrome

Confirm finish, quantity and destination with your quotation.

U2515 - UZATMA 25 ÇAP 1,5 CM.



Chrome

Confirm finish, quantity and destination with your quotation.

U2520 - UZATMA 25 ÇAP 2 CM.



Chrome

Confirm finish, quantity and destination with your quotation.

U2525 - UZATMA 25 ÇAP 2,5 CM.



Chrome

Confirm finish, quantity and destination with your quotation.

U2530 - UZATMA 25 ÇAP 3 CM.



Chrome

Confirm finish, quantity and destination with your quotation.

U2540 - UZATMA 25 ÇAP 4 CM.



Chrome

Confirm finish, quantity and destination with your quotation.

U2550 - UZATMA 25 ÇAP 5 CM.



Chrome

Confirm finish, quantity and destination with your quotation.

F0102 - FLEKS HORTUM 3/8"-3/8" 20CM.

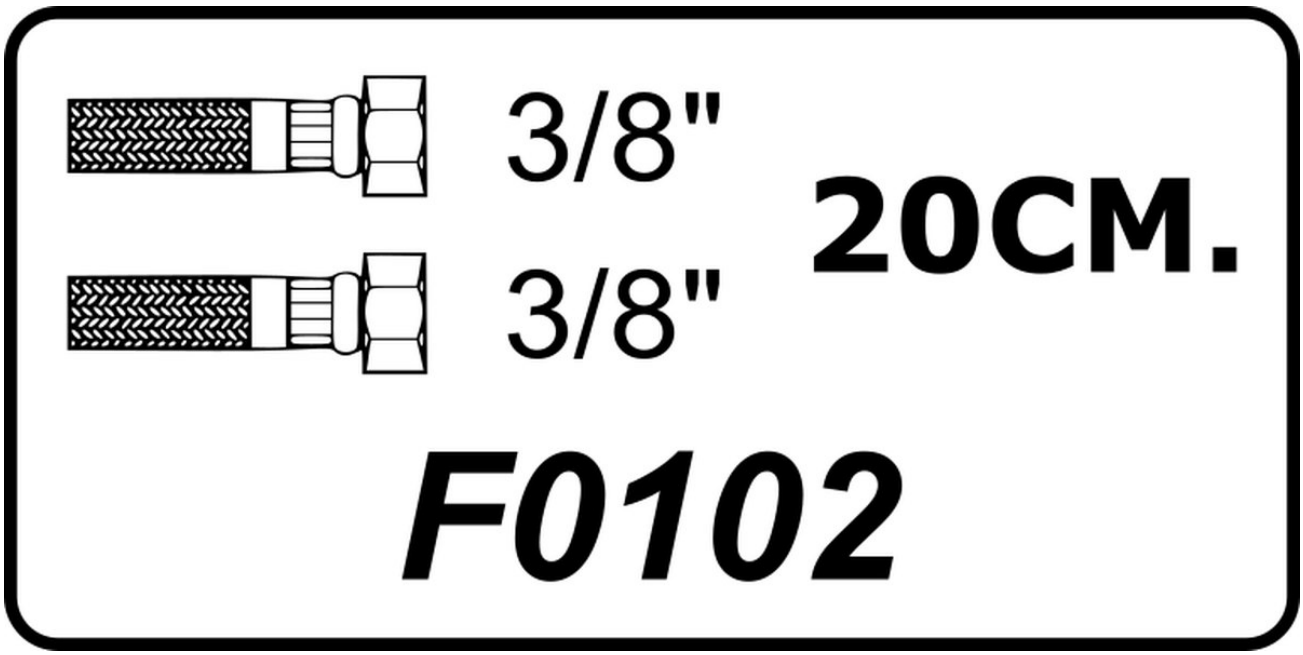

Confirm finish, quantity and destination with your quotation.

F0103 - FLEKS HORTUM 3/8"-3/8" 30CM.

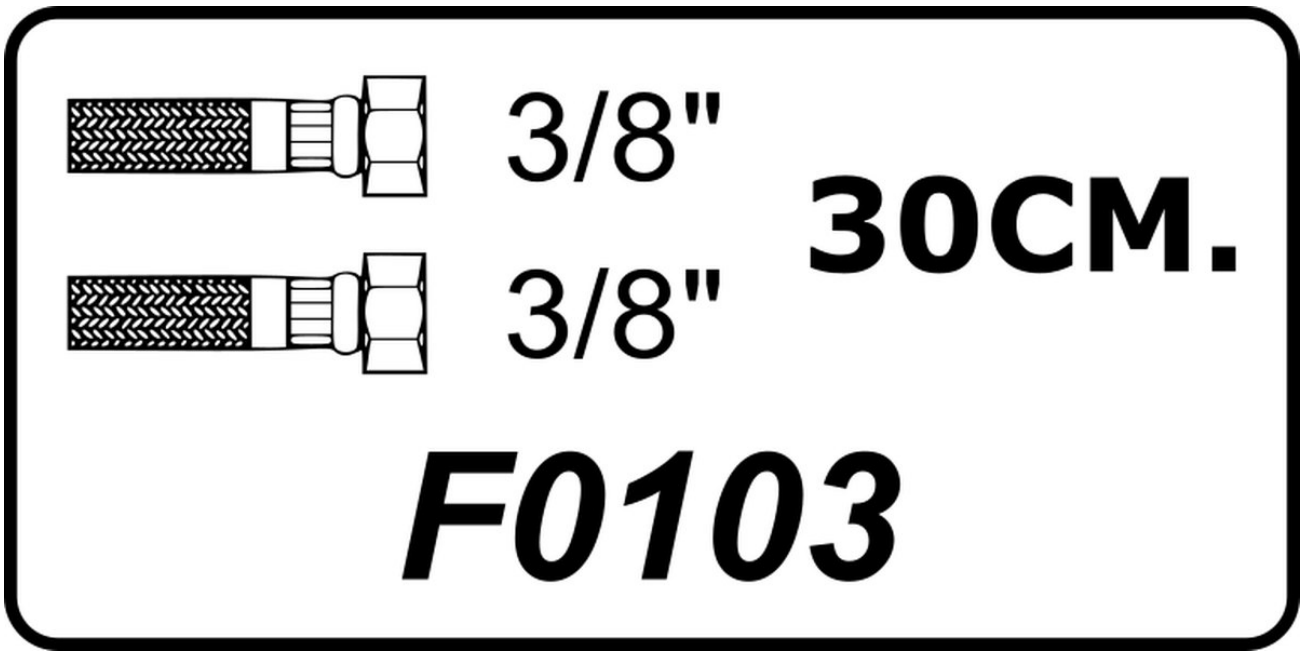

Confirm finish, quantity and destination with your quotation.

F0104 - FLEKS HORTUM 3/8"-3/8" 40CM.

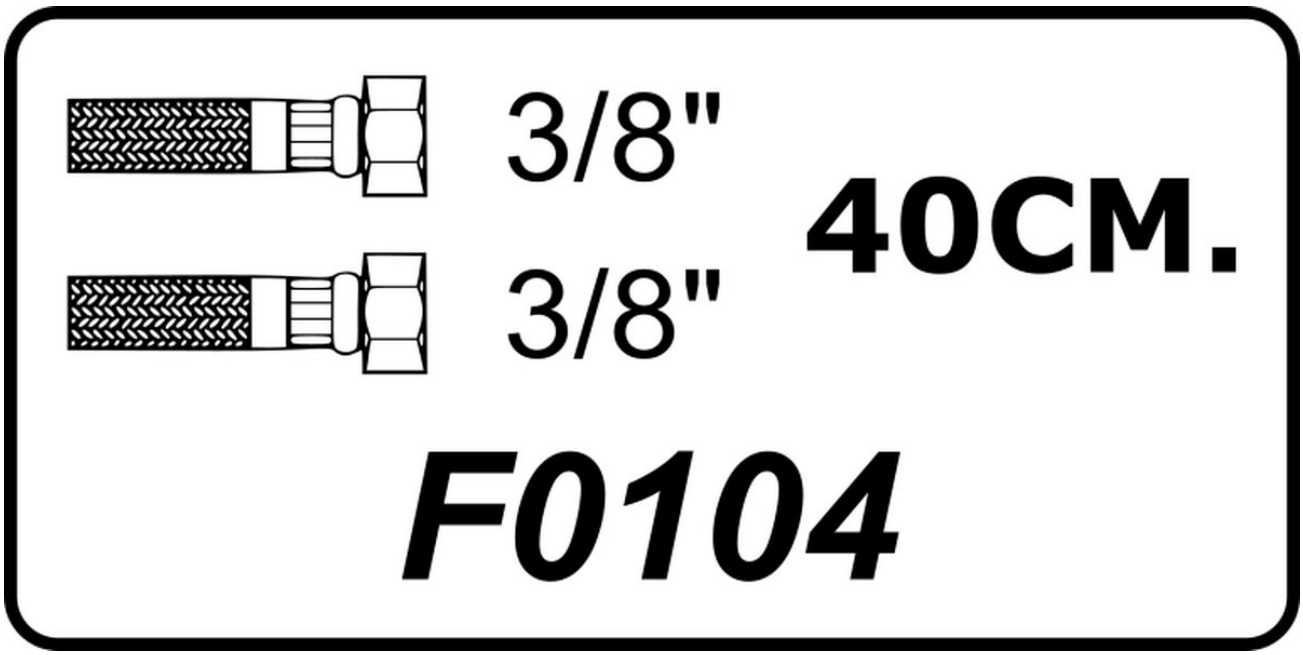

Confirm finish, quantity and destination with your quotation.

F0105 - FLEKS HORTUM 3/8"-3/8" 50CM.

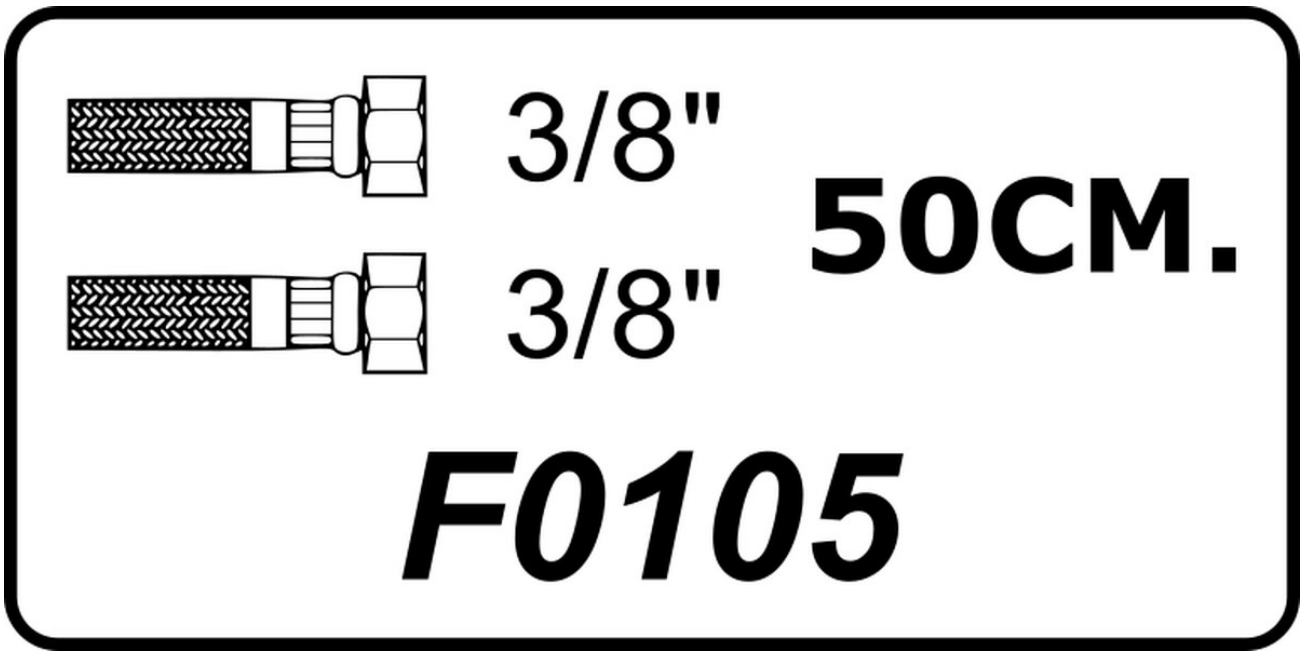

Confirm finish, quantity and destination with your quotation.

F0106 - FLEKS HORTUM 3/8"-3/8" 60CM.

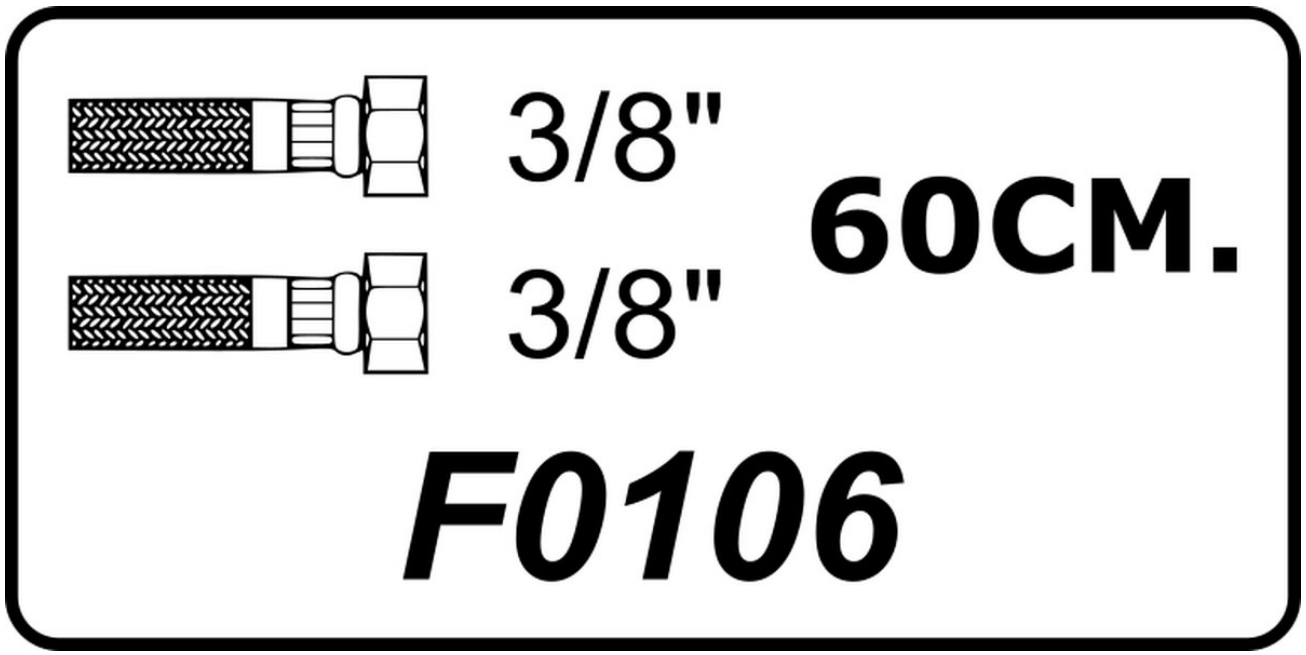

Confirm finish, quantity and destination with your quotation.

F0107 - FLEKS HORTUM 3/8"-3/8" 70CM.

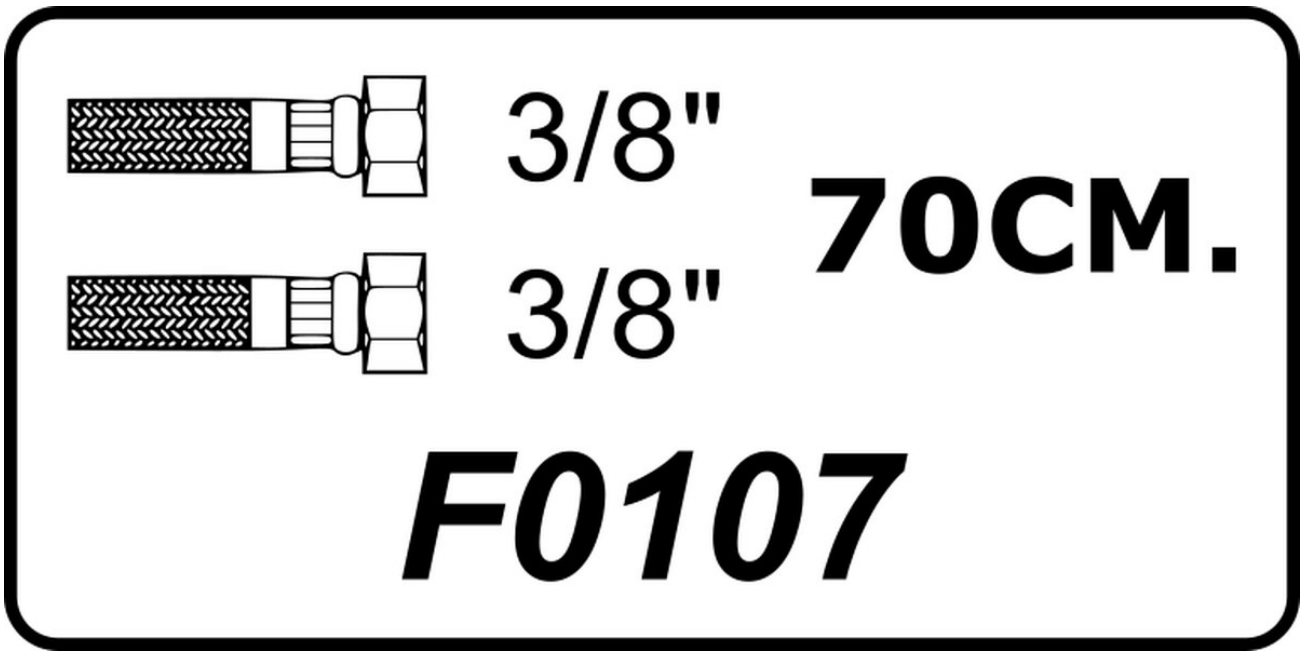

Confirm finish, quantity and destination with your quotation.

F0108 - FLEKS HORTUM 3/8"-3/8" 80CM.

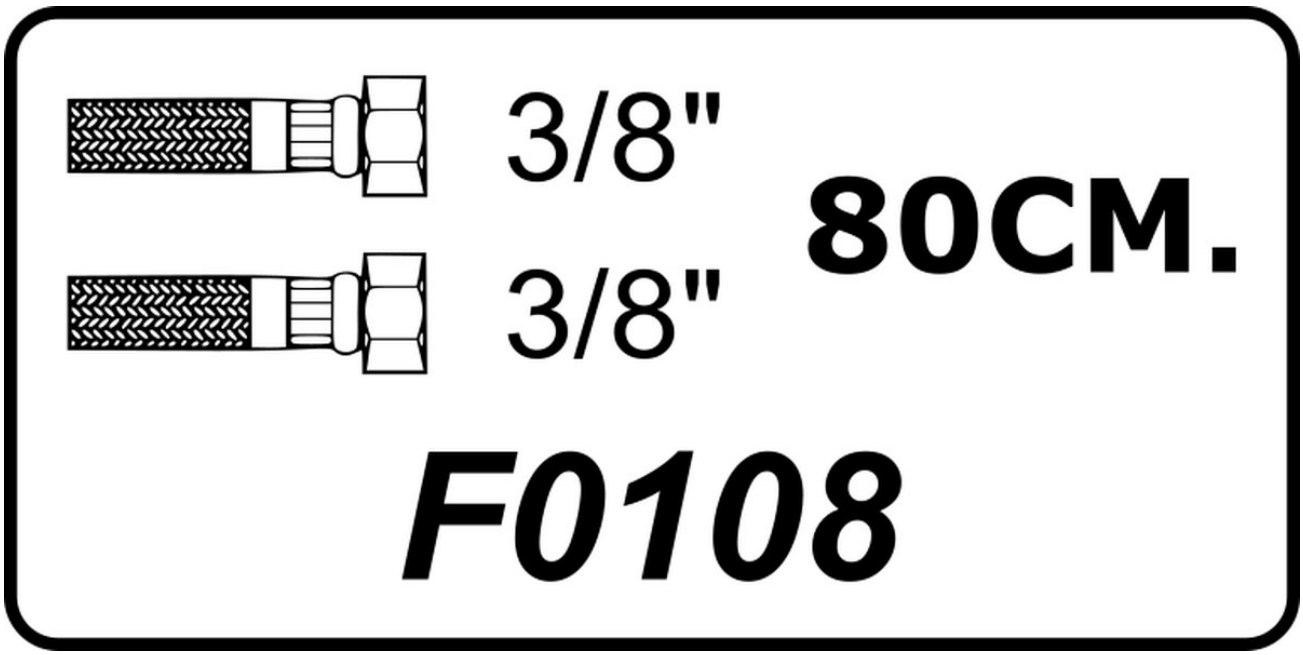

Confirm finish, quantity and destination with your quotation.

F0109 - FLEKS HORTUM 3/8"-3/8" 90CM.

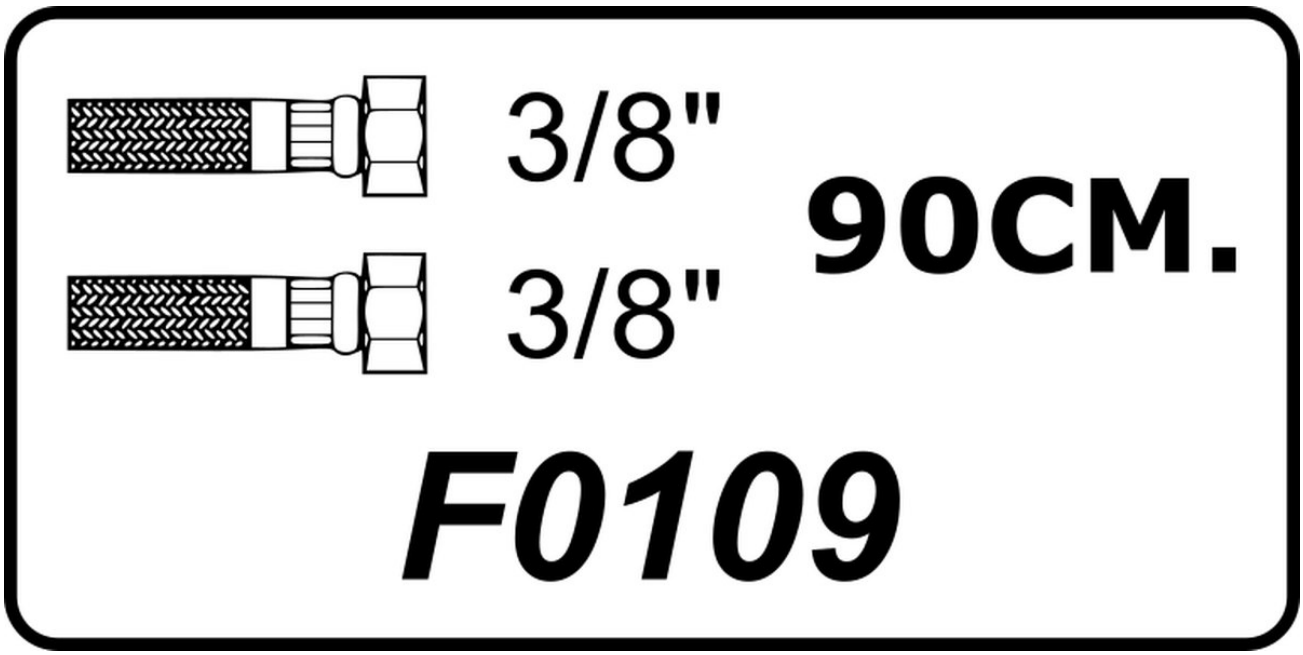

Confirm finish, quantity and destination with your quotation.

F0110 - FLEKS HORTUM 3/8"-3/8" 100CM.

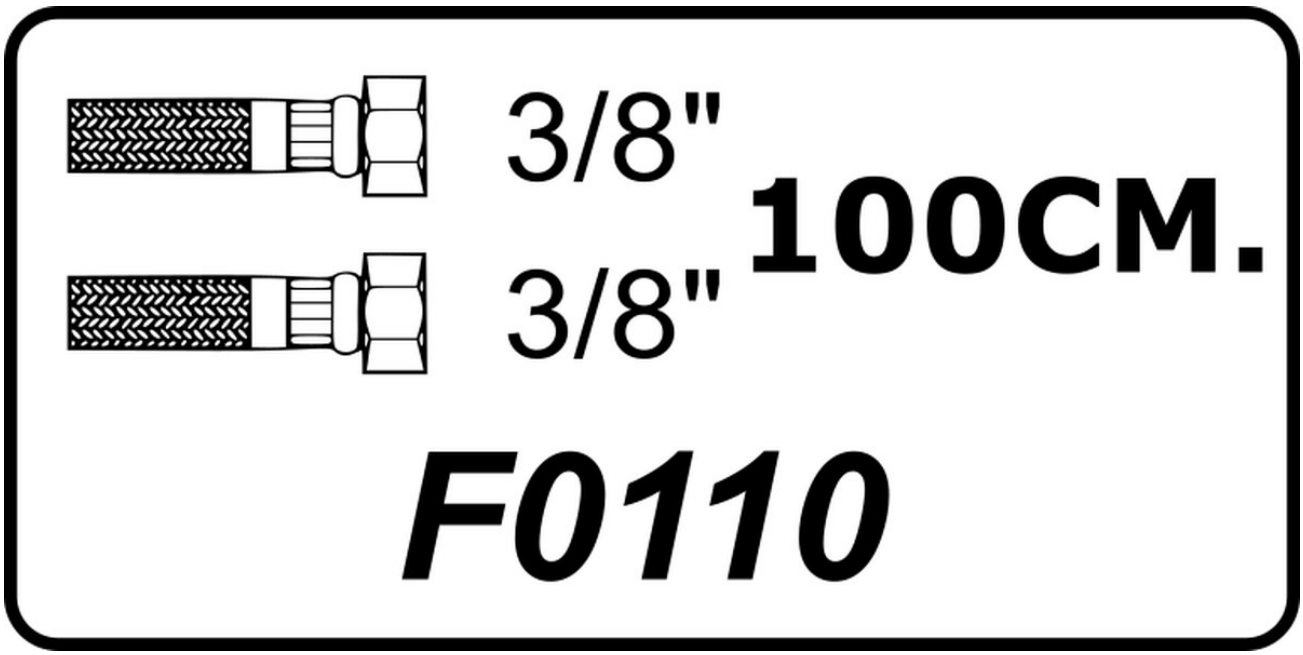

Confirm finish, quantity and destination with your quotation.

F0202 - FLEKS HORTUM 3/8"-3/8"N 20CM.

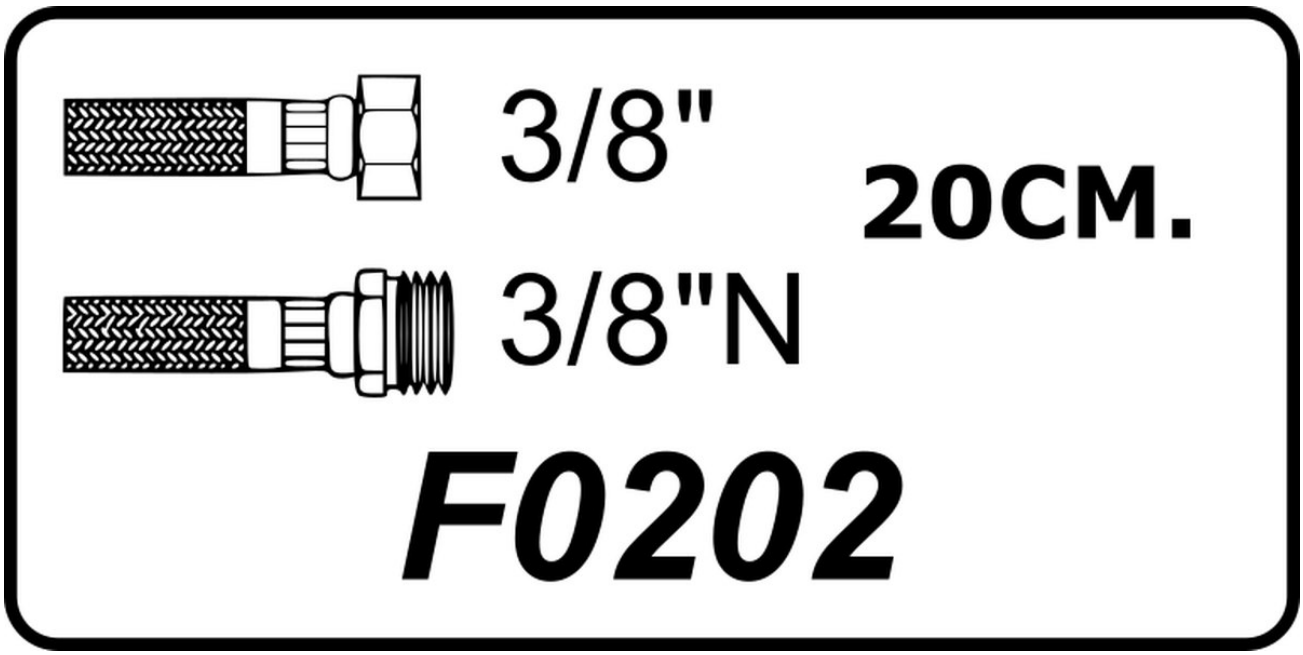

Confirm finish, quantity and destination with your quotation.

F0203 - FLEKS HORTUM 3/8"-3/8"N 30CM.

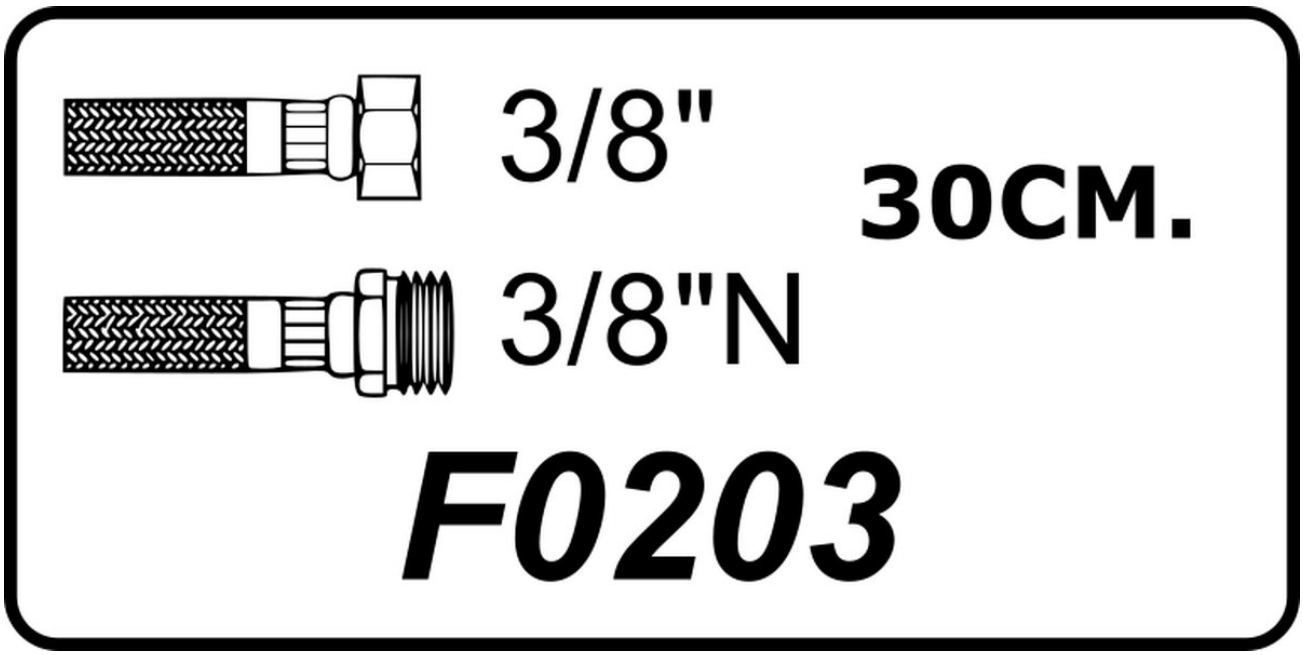

Confirm finish, quantity and destination with your quotation.

F0204 - FLEKS HORTUM 3/8"-3/8"N 40CM.

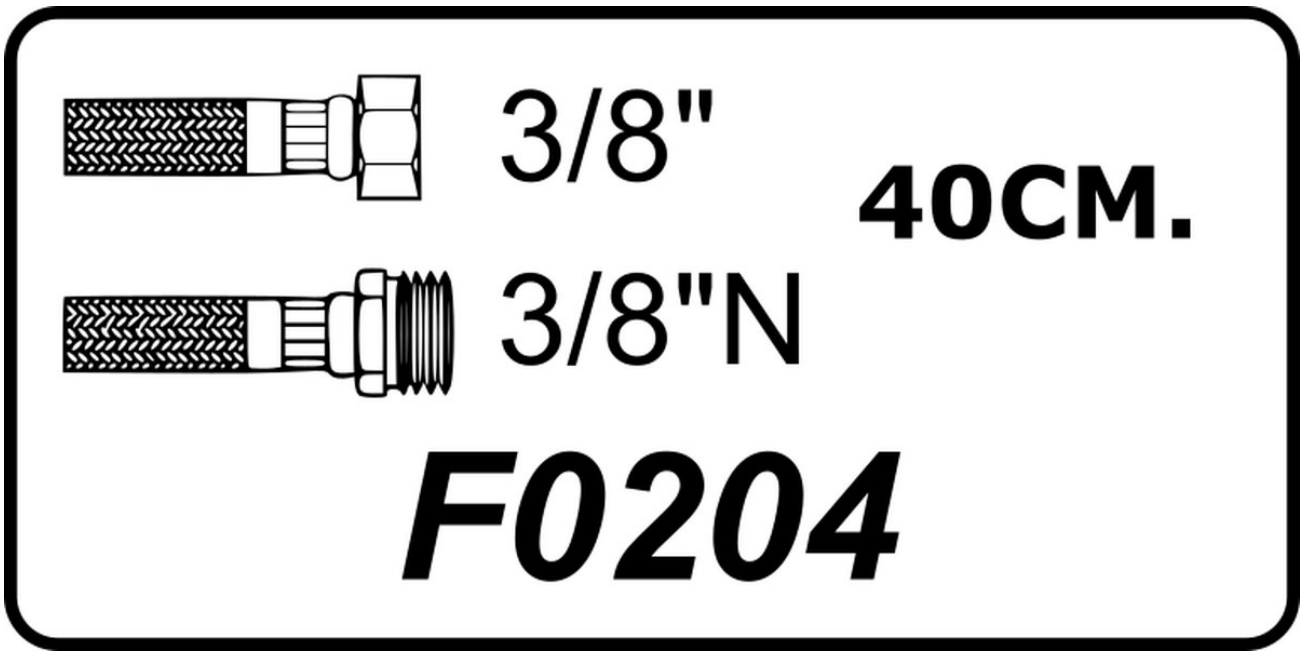

Confirm finish, quantity and destination with your quotation.

F0205 - FLEKS HORTUM 3/8"-3/8"N 50CM.

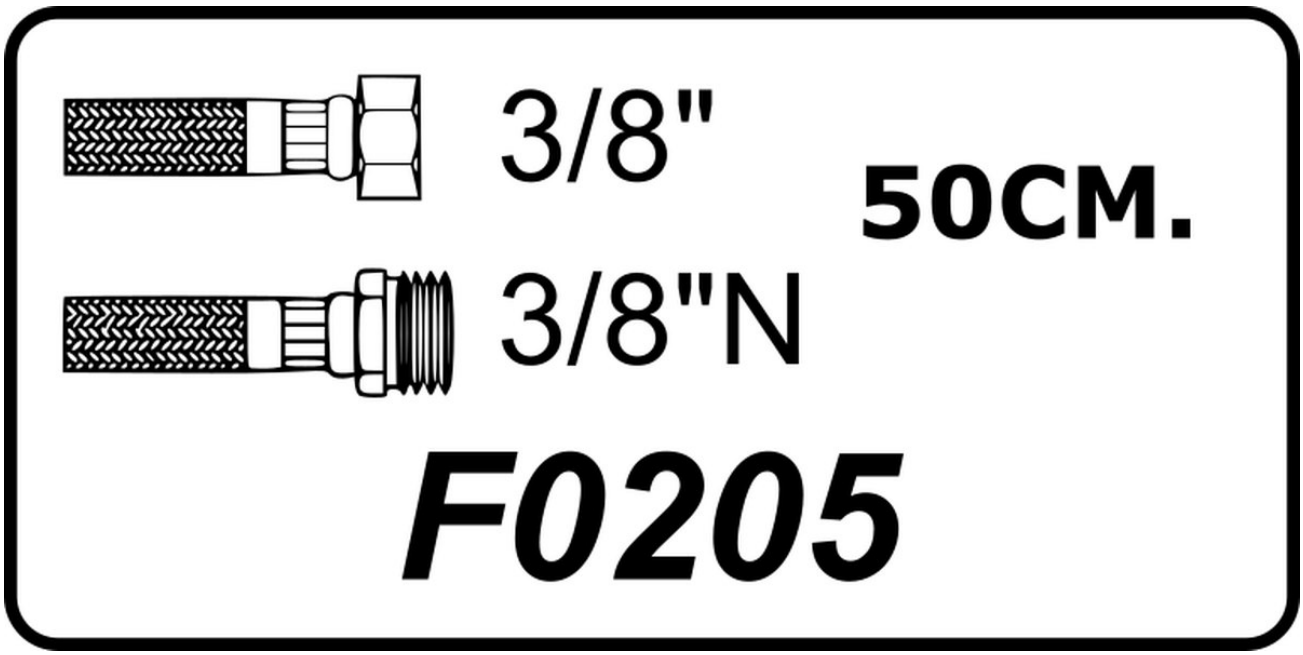

Confirm finish, quantity and destination with your quotation.

F0206 - FLEKS HORTUM 3/8"-3/8"N 60CM.

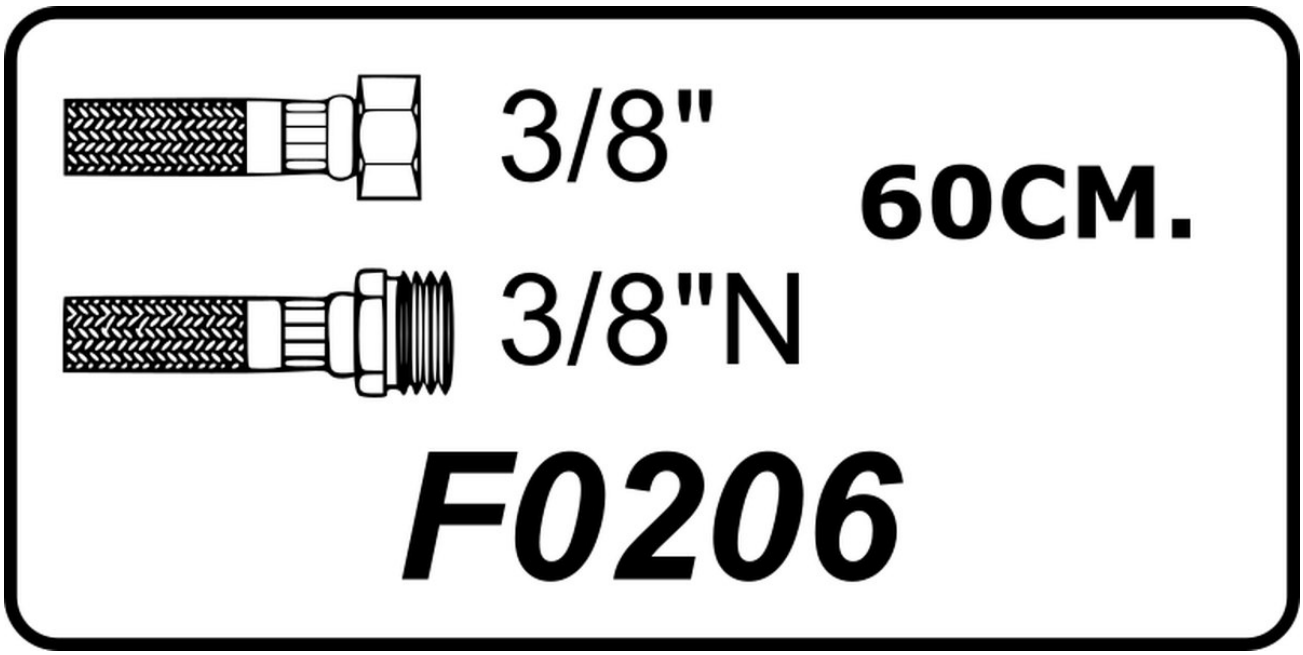

Confirm finish, quantity and destination with your quotation.

F0207 - FLEKS HORTUM 3/8"-3/8"N 70CM.

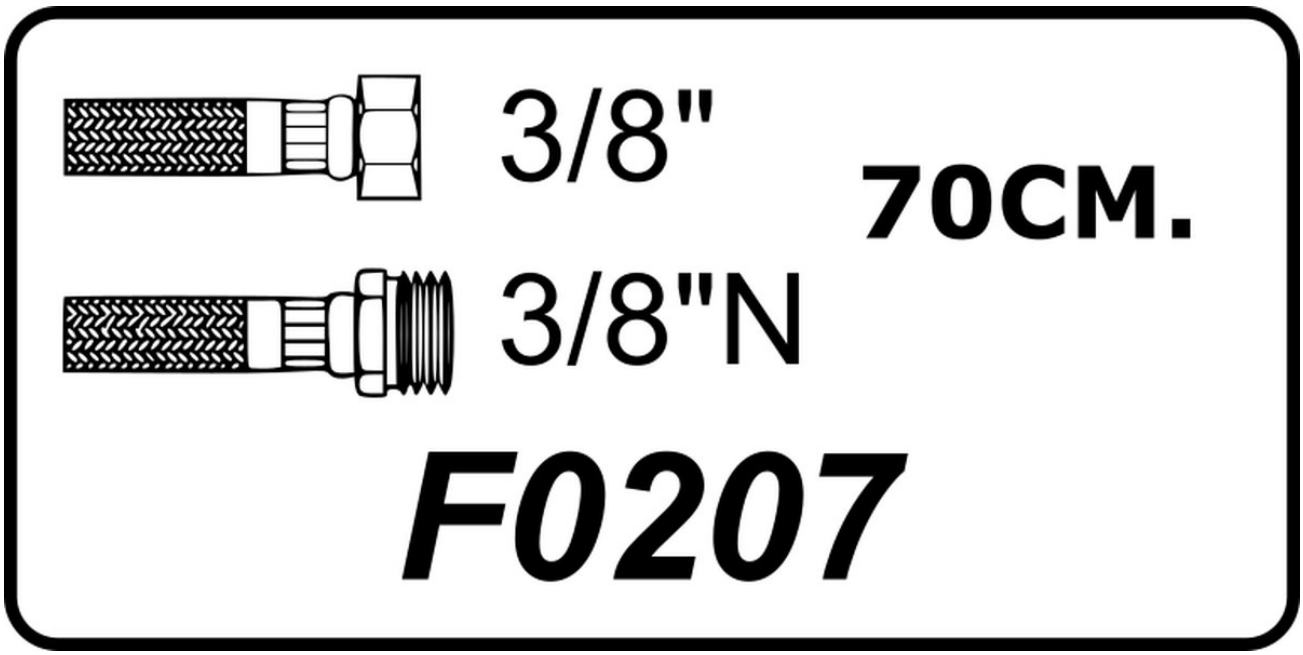

Confirm finish, quantity and destination with your quotation.

F0208 - FLEKS HORTUM 3/8"-3/8"N 80CM.

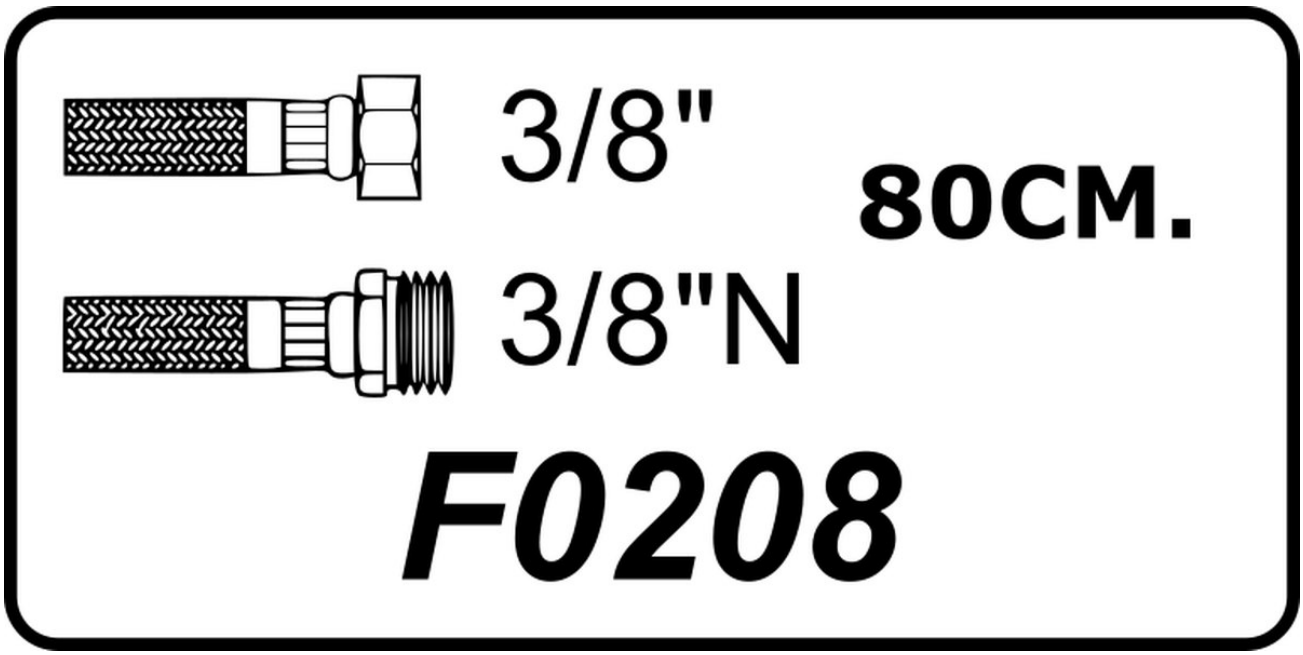

Confirm finish, quantity and destination with your quotation.

F0209 - FLEKS HORTUM 3/8"-3/8"N 90CM.

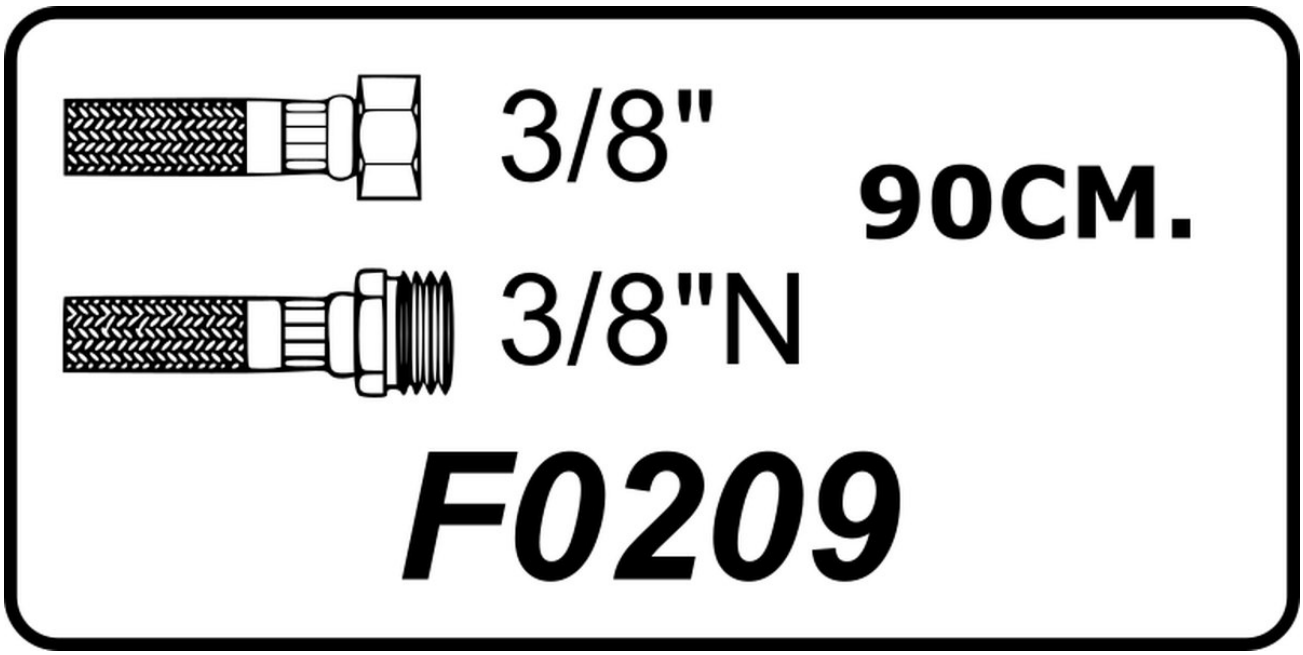

Confirm finish, quantity and destination with your quotation.

F0210 - FLEKS HORTUM 3/8"-3/8"N 100CM.

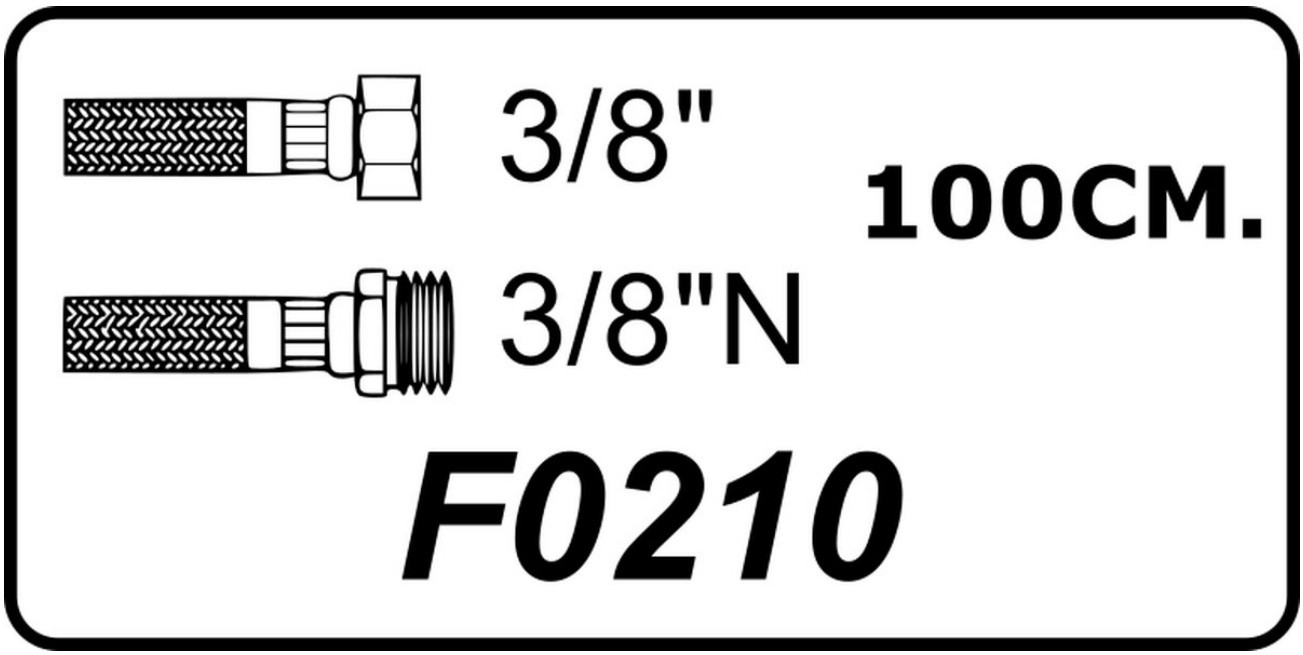

Confirm finish, quantity and destination with your quotation.

F0302 - FLEKS HORTUM 3/8"-1/2" 20CM.

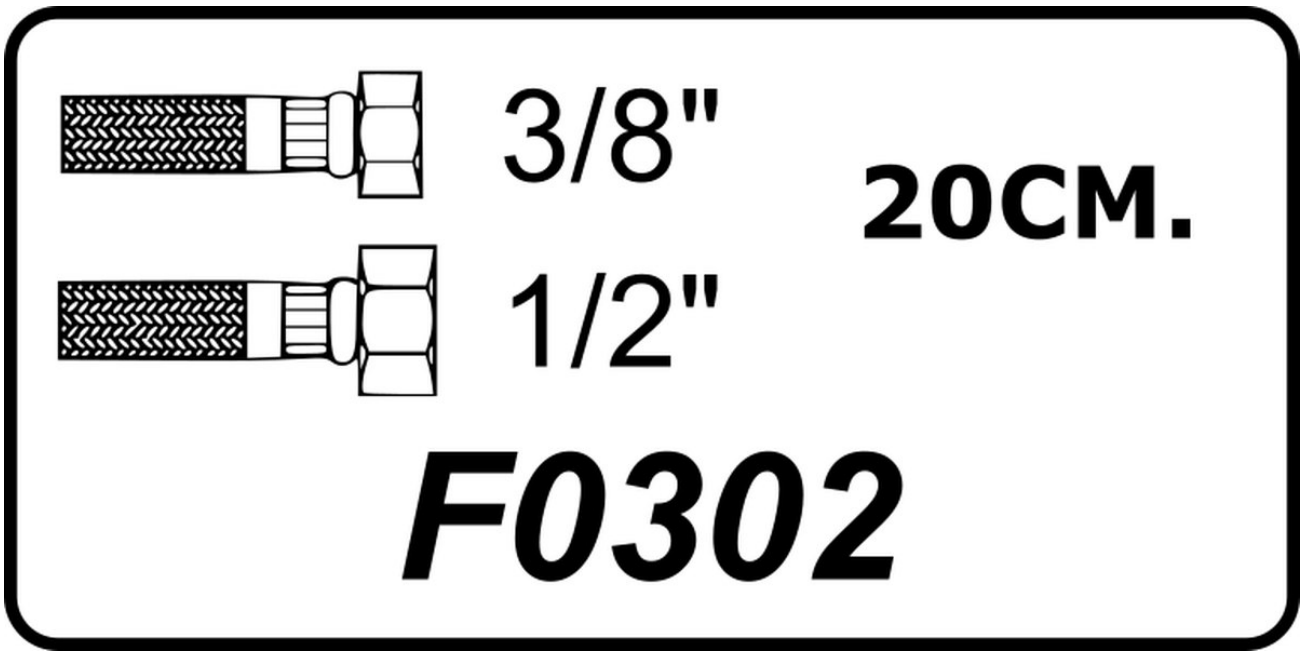

Confirm finish, quantity and destination with your quotation.

F0303 - FLEKS HORTUM 3/8"-1/2" 30CM.

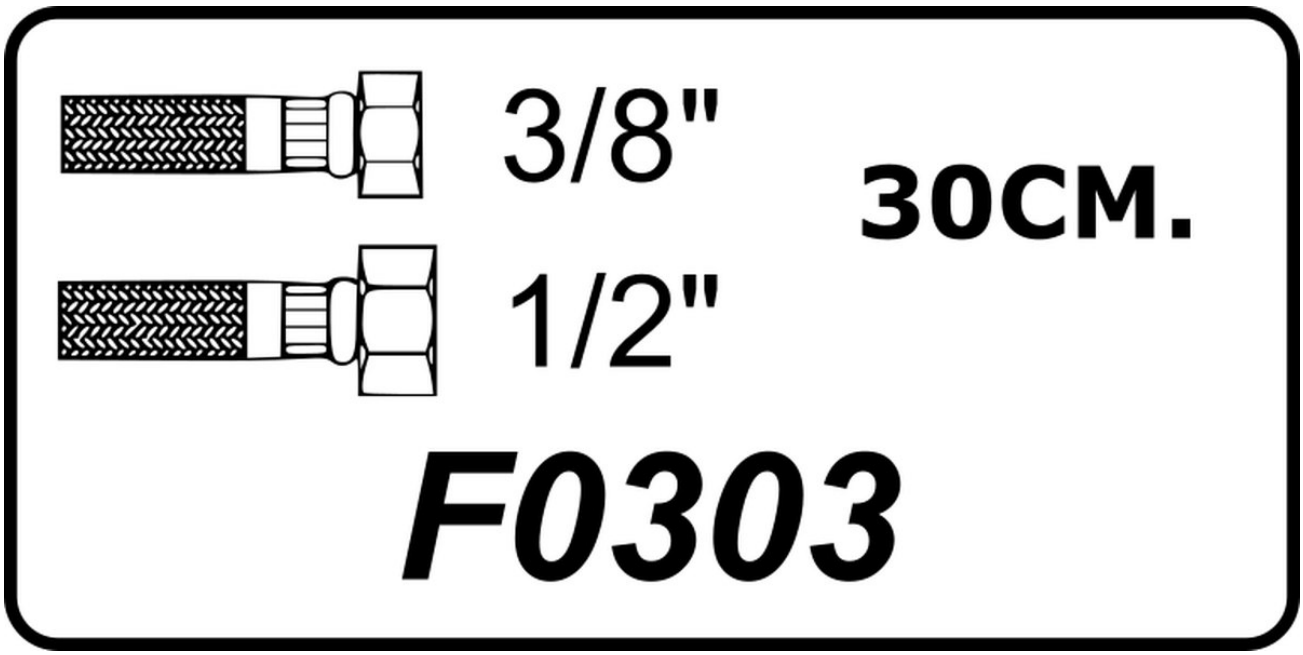

Confirm finish, quantity and destination with your quotation.

F0304 - FLEKS HORTUM 3/8"-1/2" 40CM.

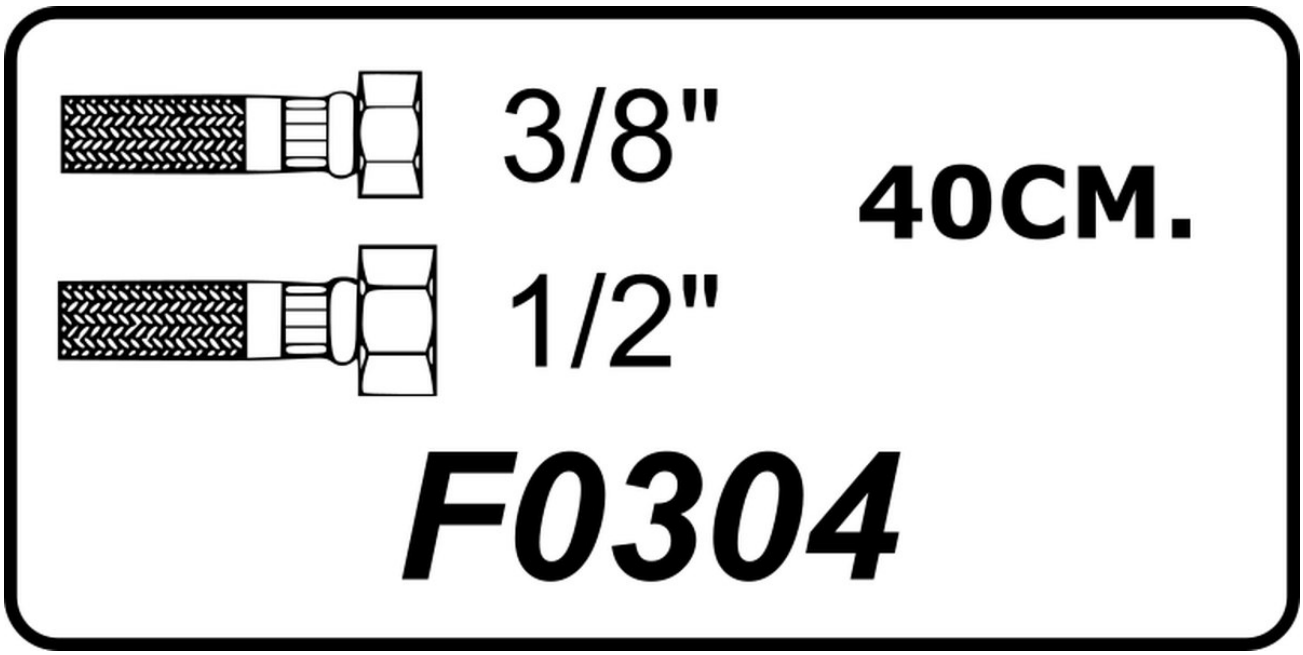

Confirm finish, quantity and destination with your quotation.

F0305 - FLEKS HORTUM 3/8"-1/2" 50CM.

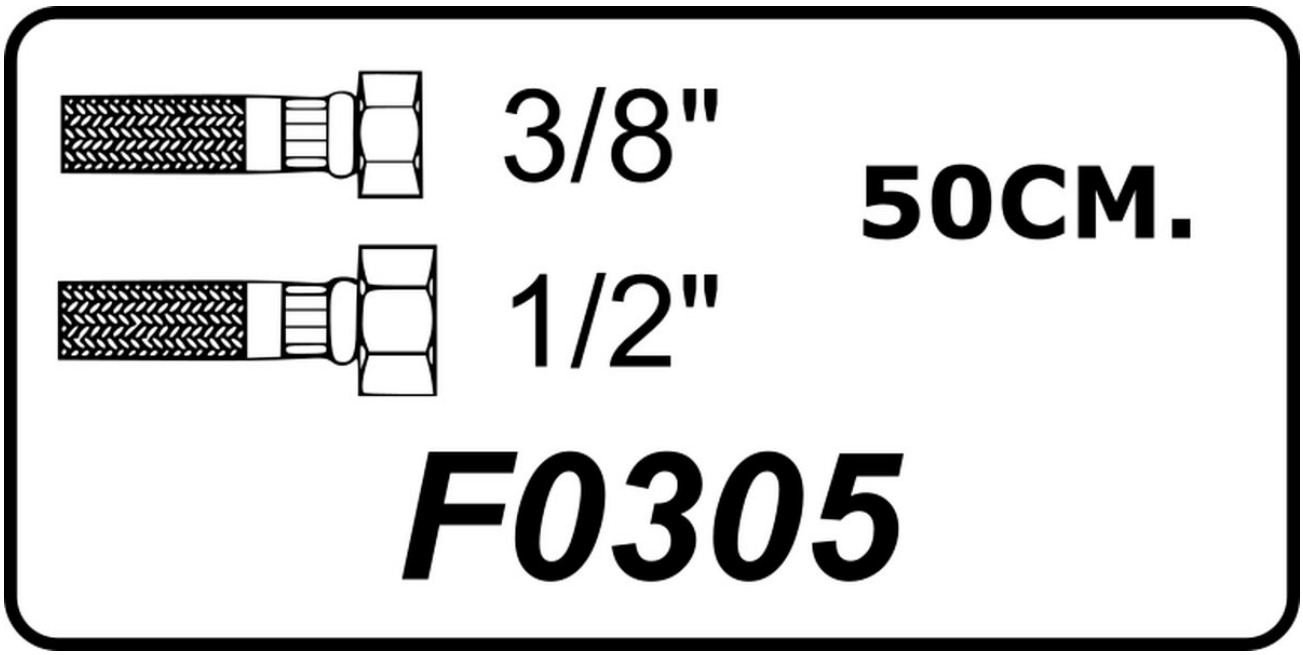

Confirm finish, quantity and destination with your quotation.

F0306 - FLEKS HORTUM 3/8"-1/2" 60CM.

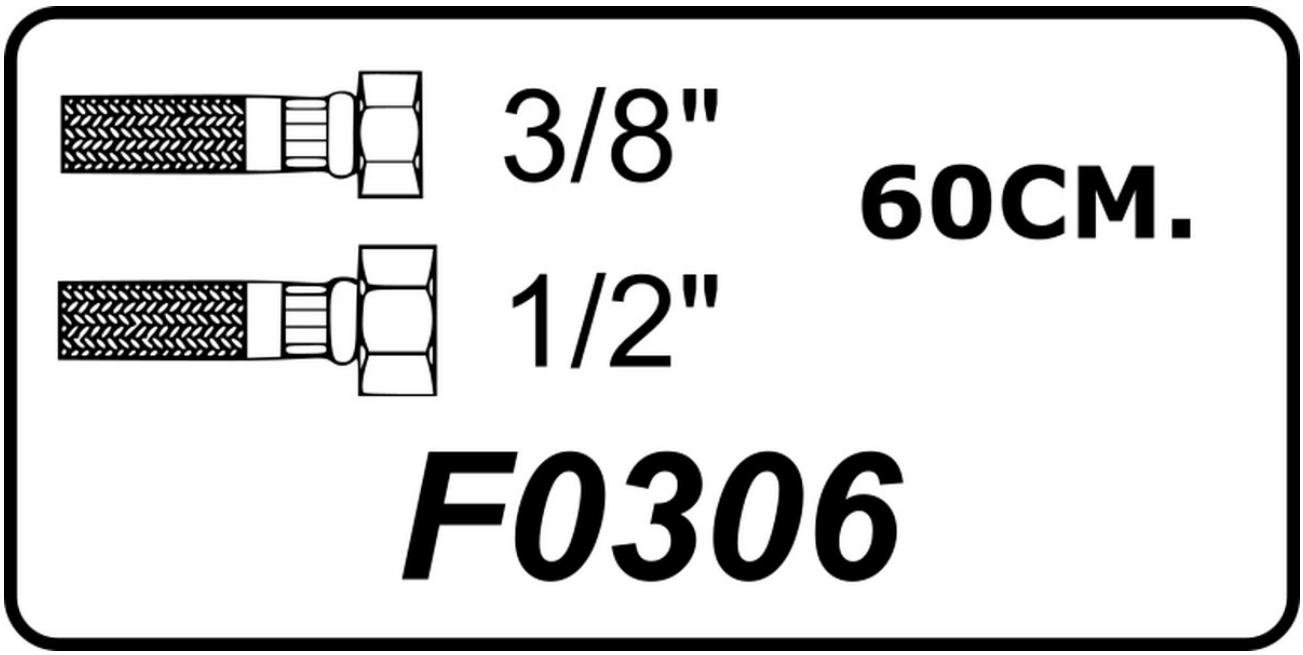

Confirm finish, quantity and destination with your quotation.

F0307 - FLEKS HORTUM 3/8"-1/2" 70CM.

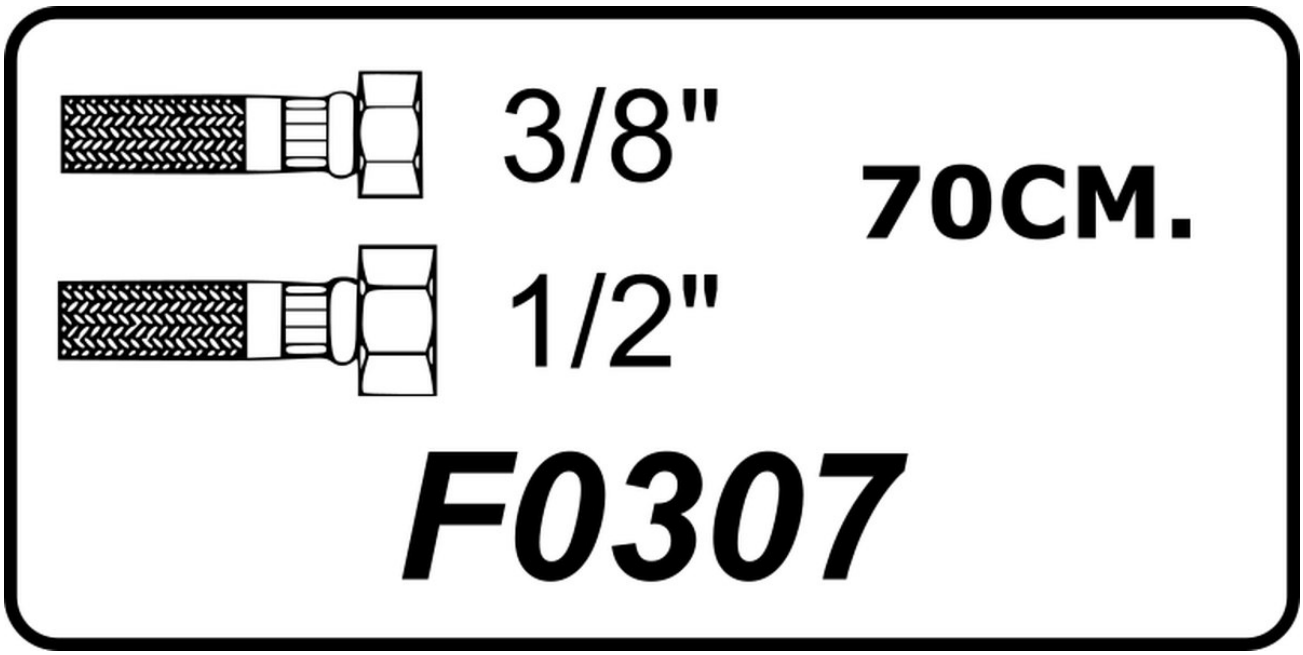

Confirm finish, quantity and destination with your quotation.

F0308 - FLEKS HORTUM 3/8"-1/2" 80CM.

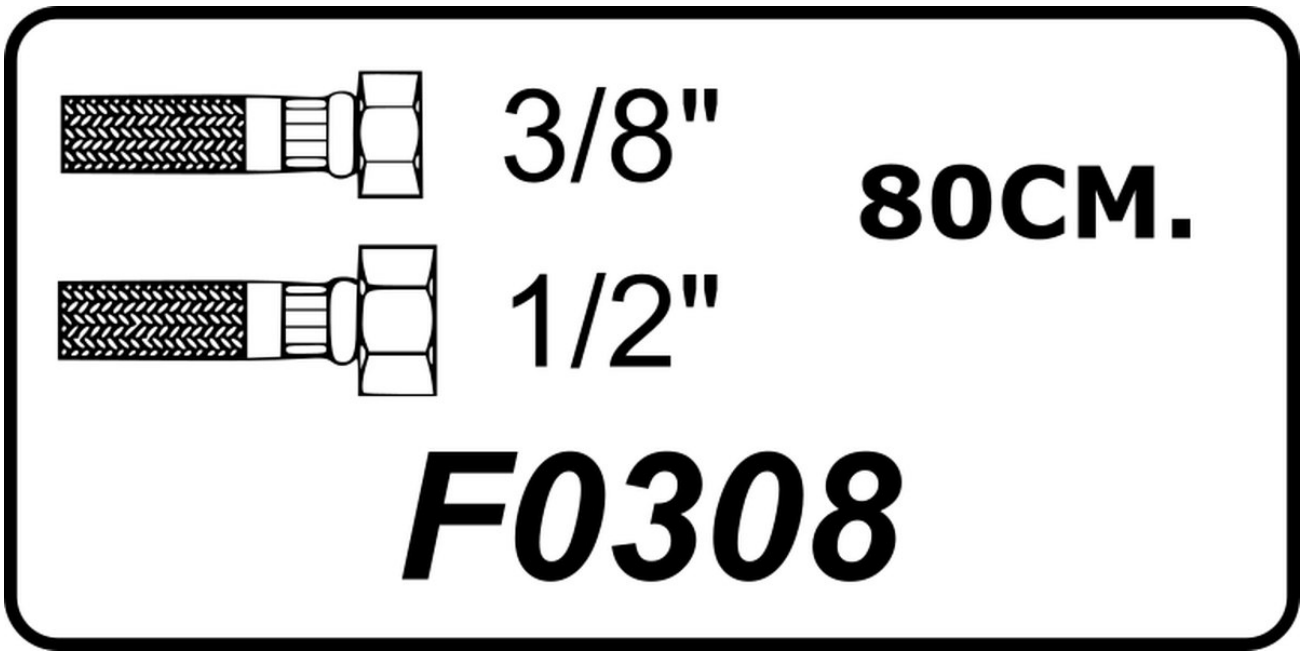

Confirm finish, quantity and destination with your quotation.

F0309 - FLEKS HORTUM 3/8"-1/2" 90CM.

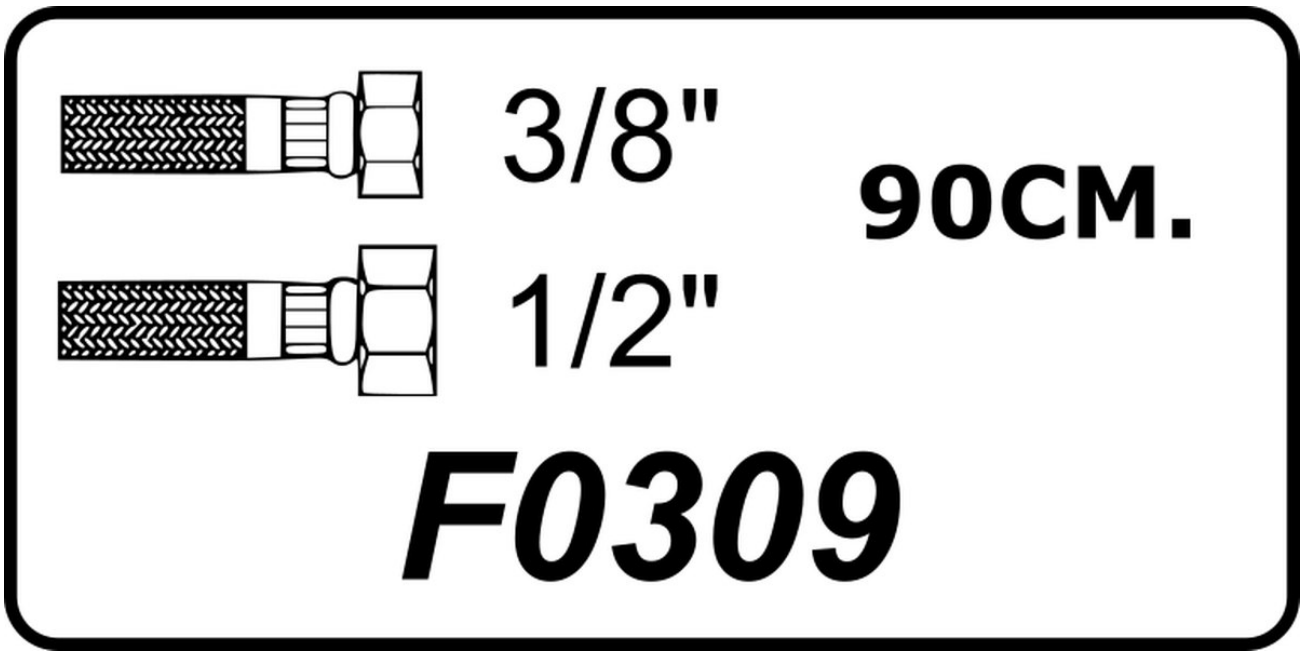

Confirm finish, quantity and destination with your quotation.

F0310 - FLEKS HORTUM 3/8"-1/2" 100CM.

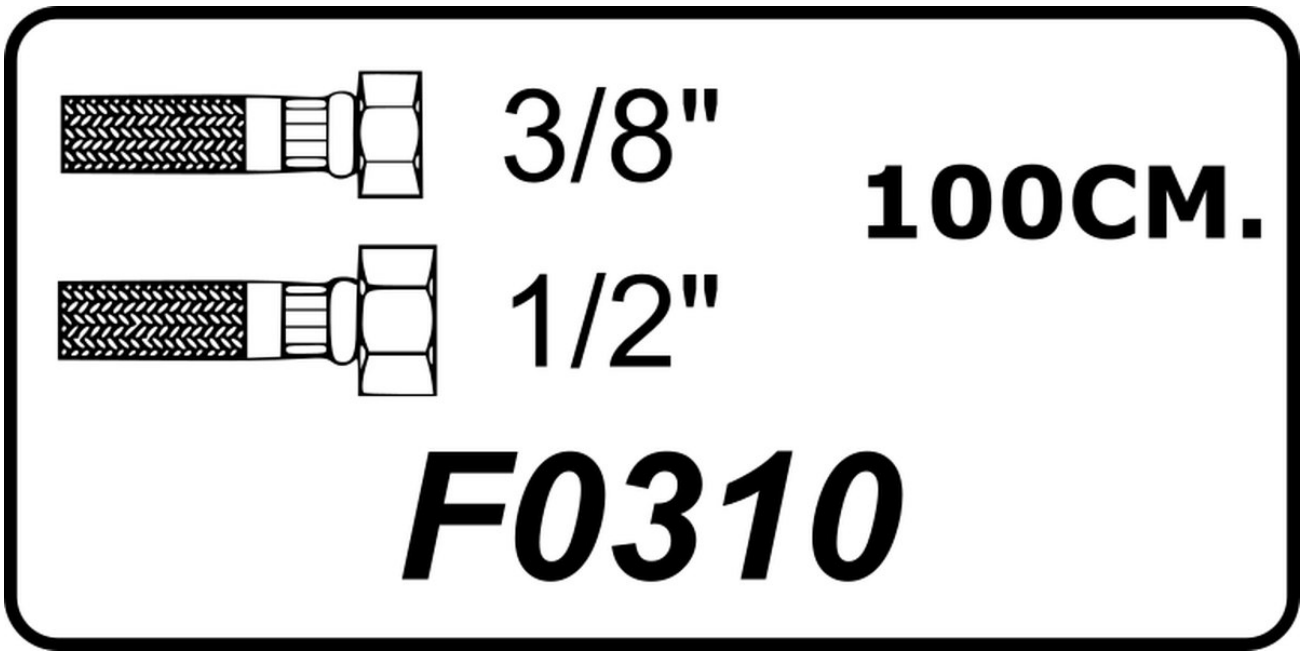

Confirm finish, quantity and destination with your quotation.

F0402 - FLEKS HORTUM 1/2"-1/2" 20CM.

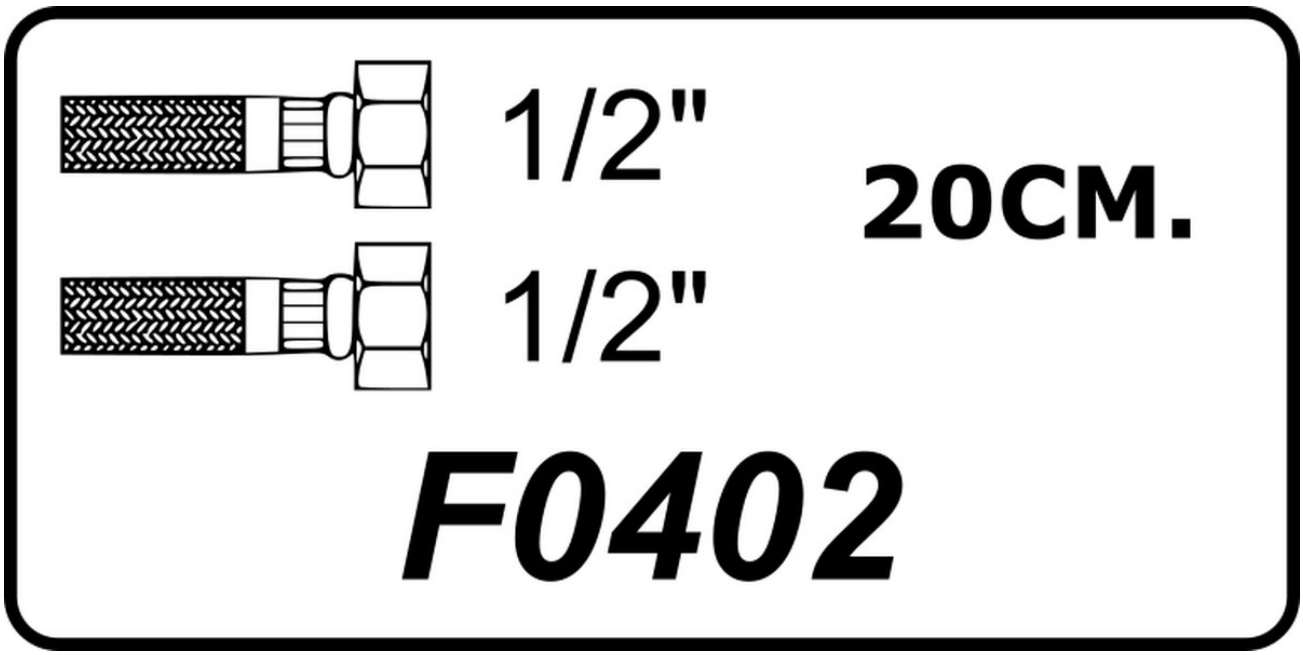

Confirm finish, quantity and destination with your quotation.

F0403 - FLEKS HORTUM 1/2"-1/2" 30CM.

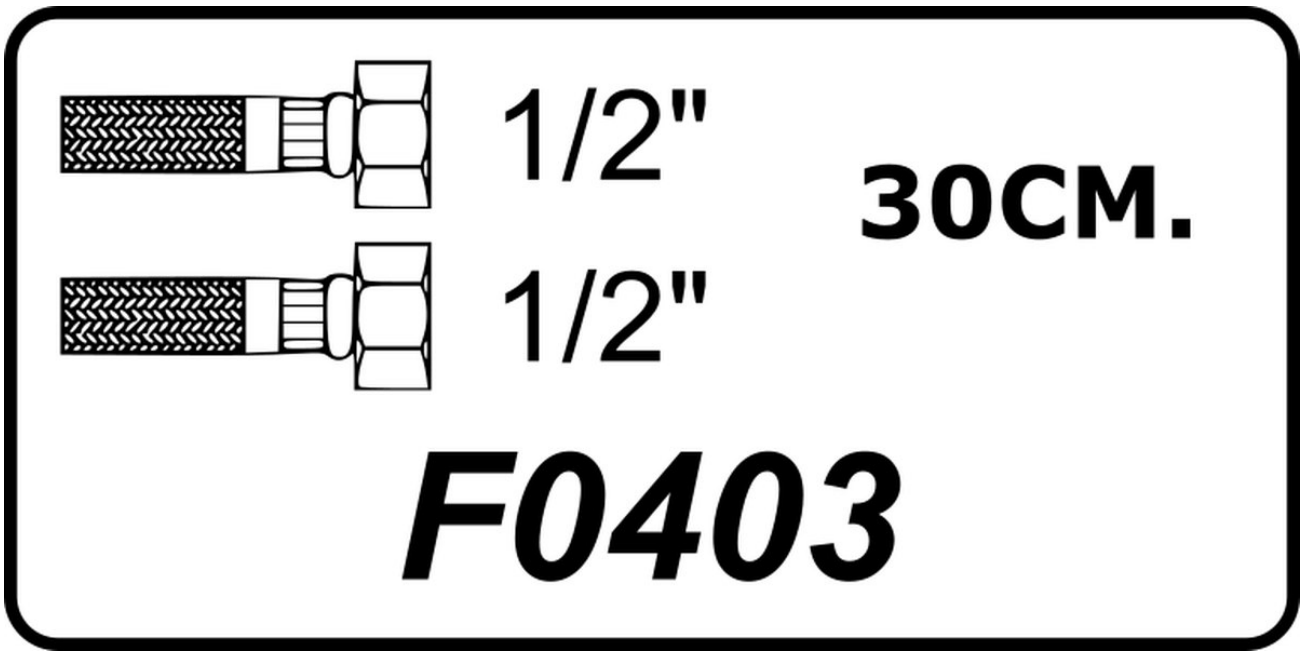

Confirm finish, quantity and destination with your quotation.

F0404 - FLEKS HORTUM 1/2"-1/2" 40CM.

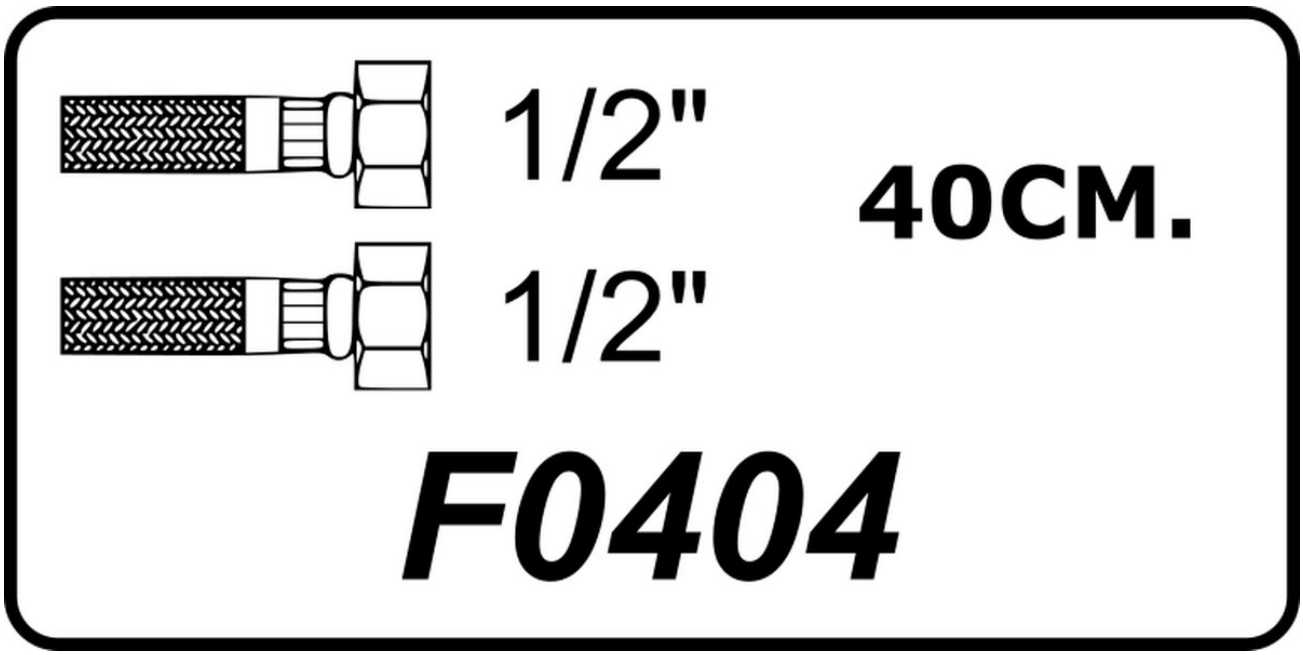

Confirm finish, quantity and destination with your quotation.

F0405 - FLEKS HORTUM 1/2"-1/2" 50CM.

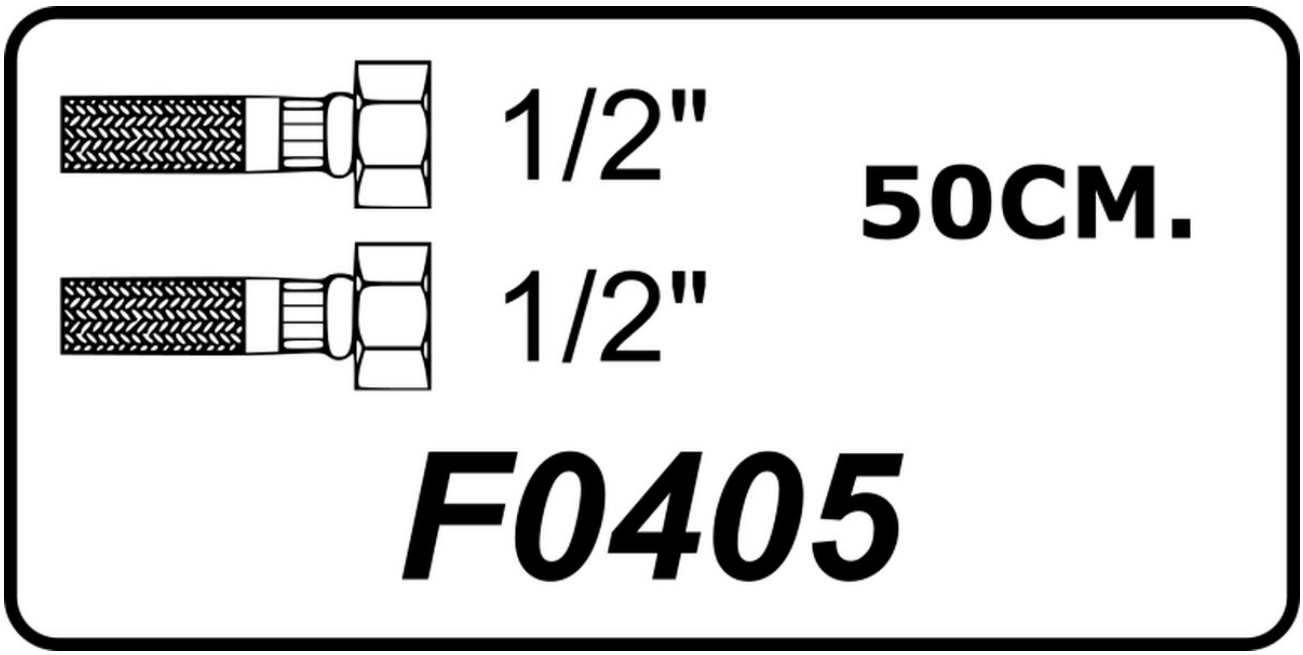

Confirm finish, quantity and destination with your quotation.

F0406 - FLEKS HORTUM 1/2"-1/2" 60CM.

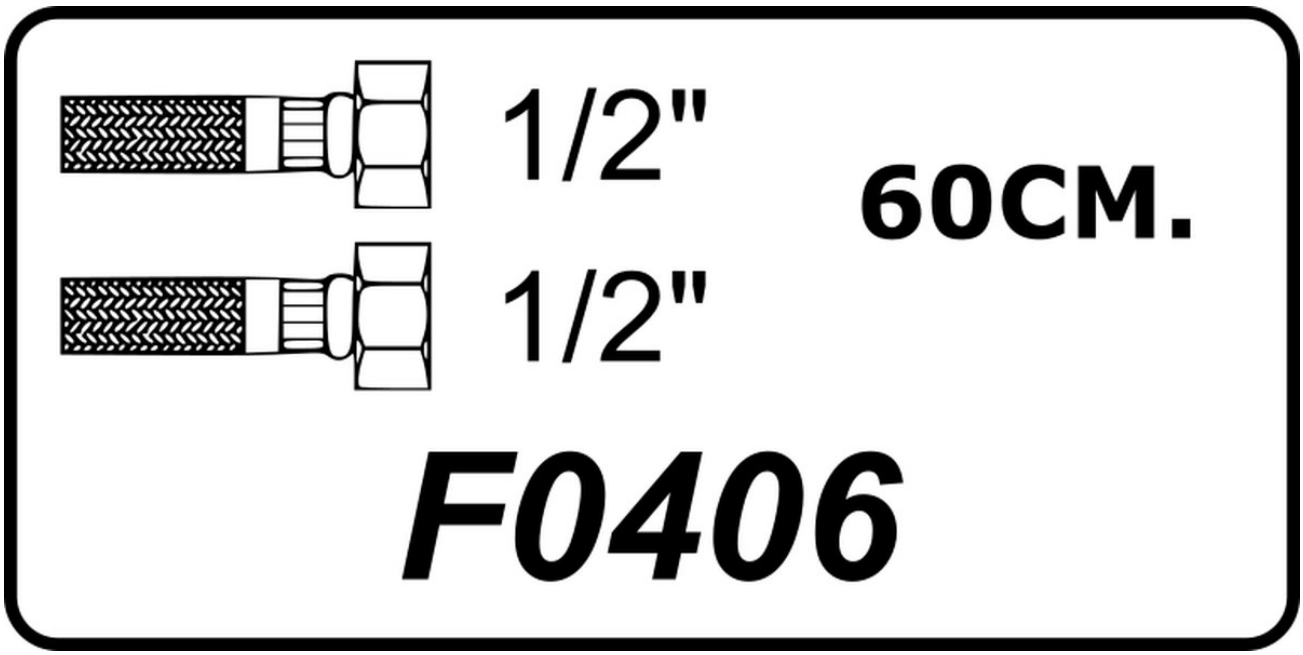

Confirm finish, quantity and destination with your quotation.

F0407 - FLEKS HORTUM 1/2"-1/2" 70CM.

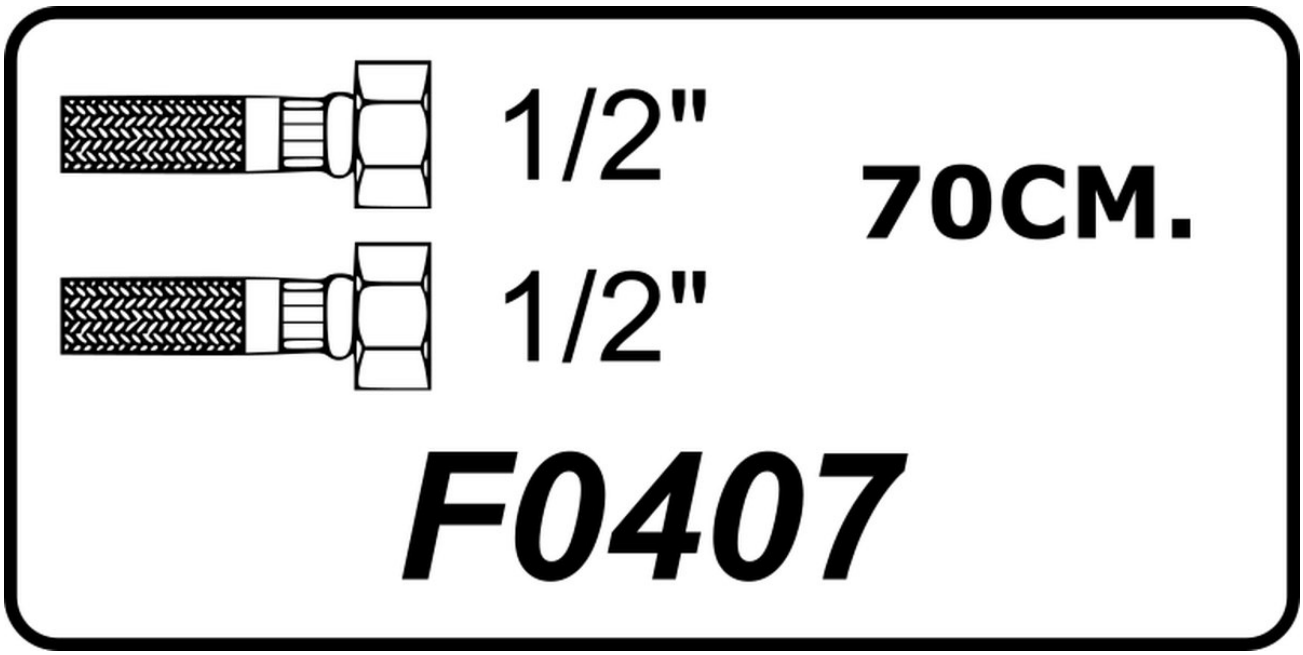

Confirm finish, quantity and destination with your quotation.

F0408 - FLEKS HORTUM 1/2"-1/2" 80CM.

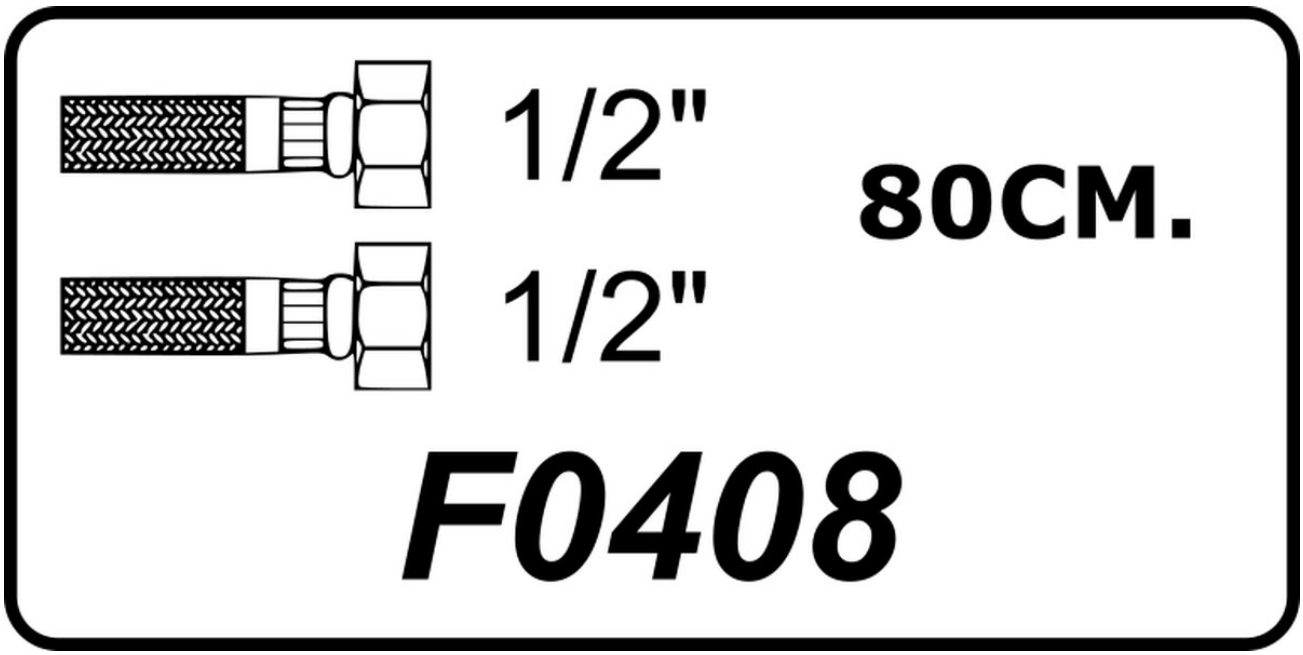

Confirm finish, quantity and destination with your quotation.

F0409 - FLEKS HORTUM 1/2"-1/2" 90CM.

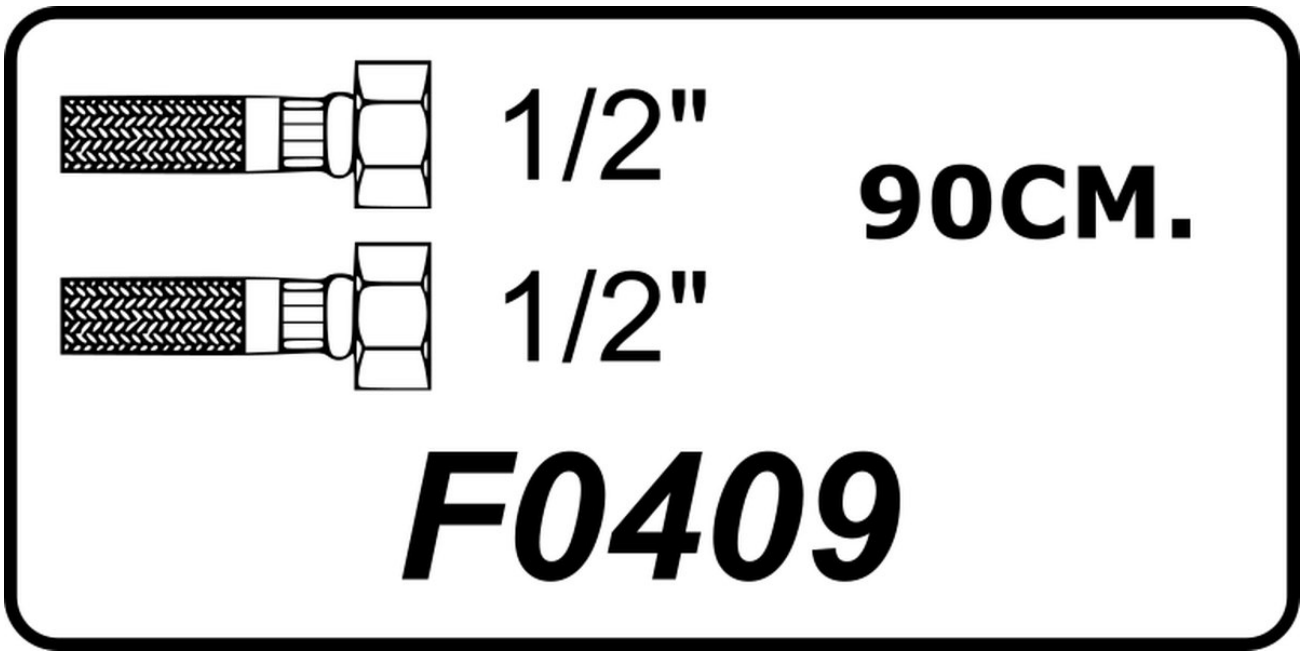

Confirm finish, quantity and destination with your quotation.

F0410 - FLEKS HORTUM 1/2"-1/2" 100CM.

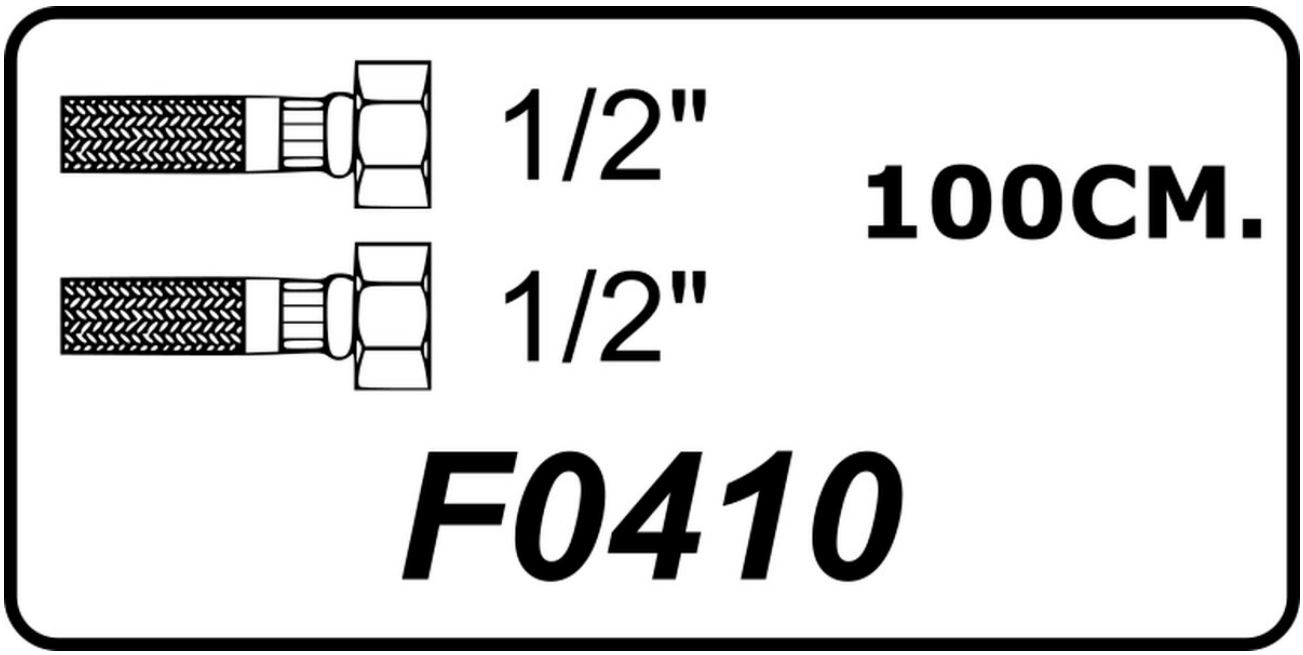

Confirm finish, quantity and destination with your quotation.

F0502 - FLEKS HORTUM 1/2"-1/2"N 20CM.

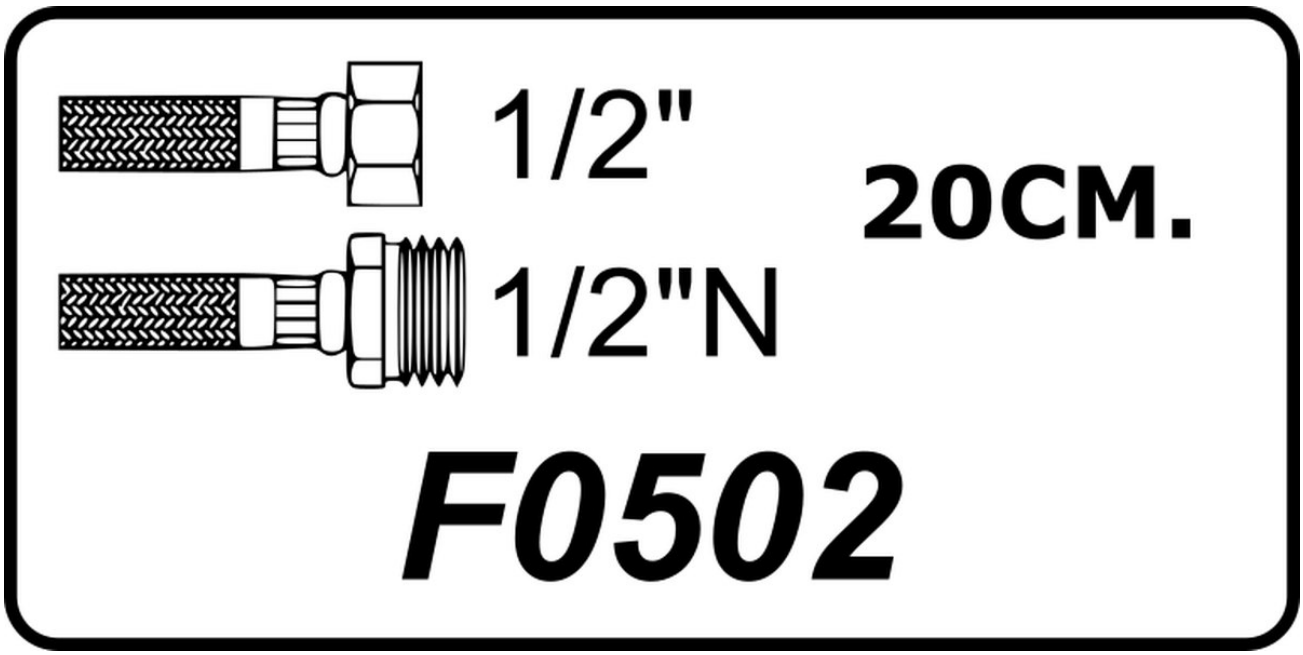

Confirm finish, quantity and destination with your quotation.

F0503 - FLEKS HORTUM 1/2"-1/2"N 30CM.

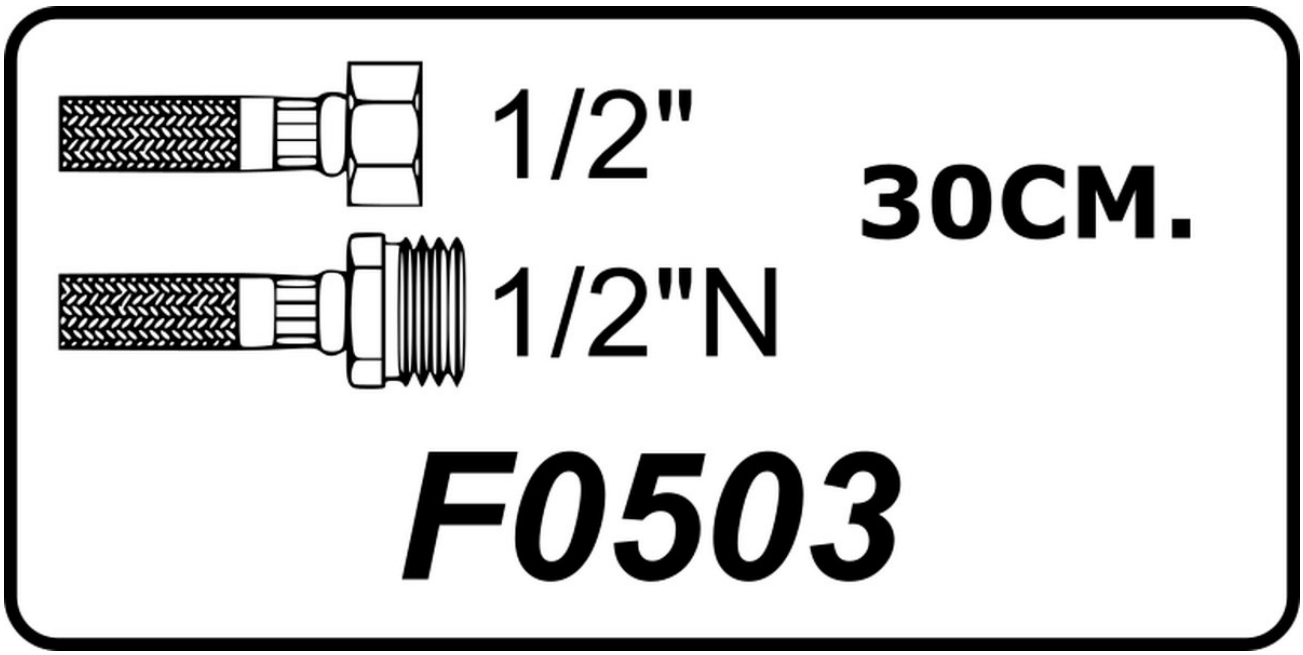

Confirm finish, quantity and destination with your quotation.

F0504 - FLEKS HORTUM 1/2"-1/2"N 40CM.

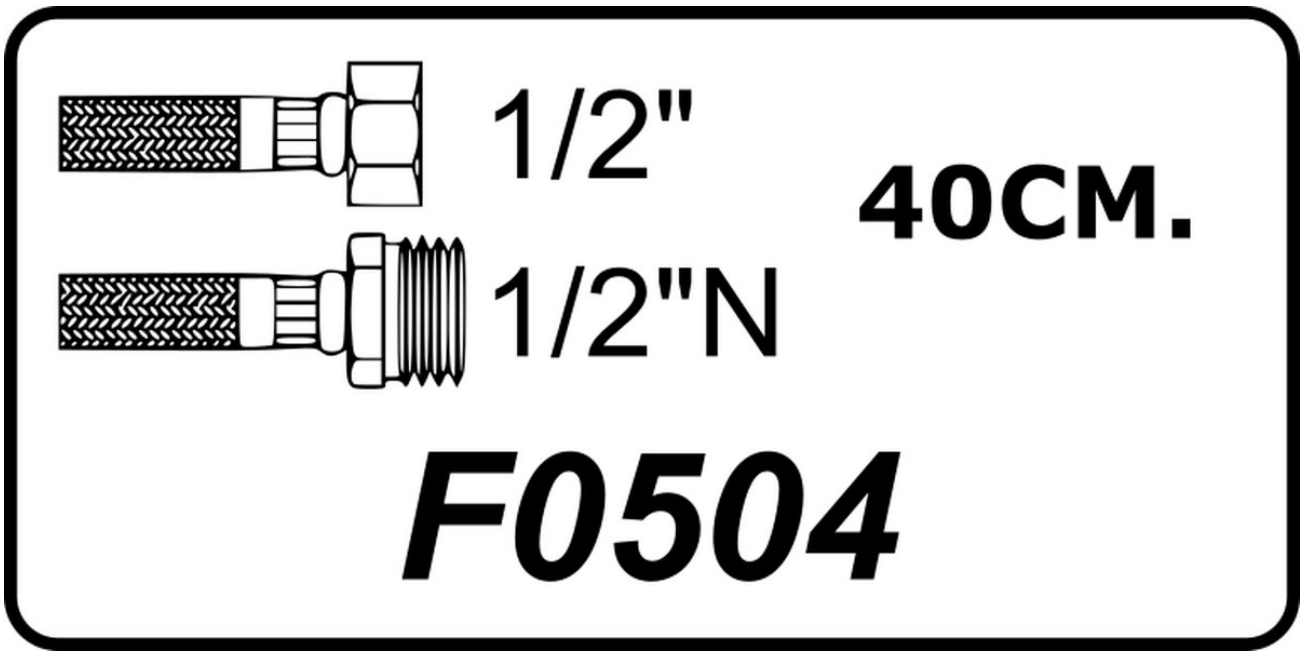

Confirm finish, quantity and destination with your quotation.

F0505 - FLEKS HORTUM 1/2"-1/2"N 50CM.

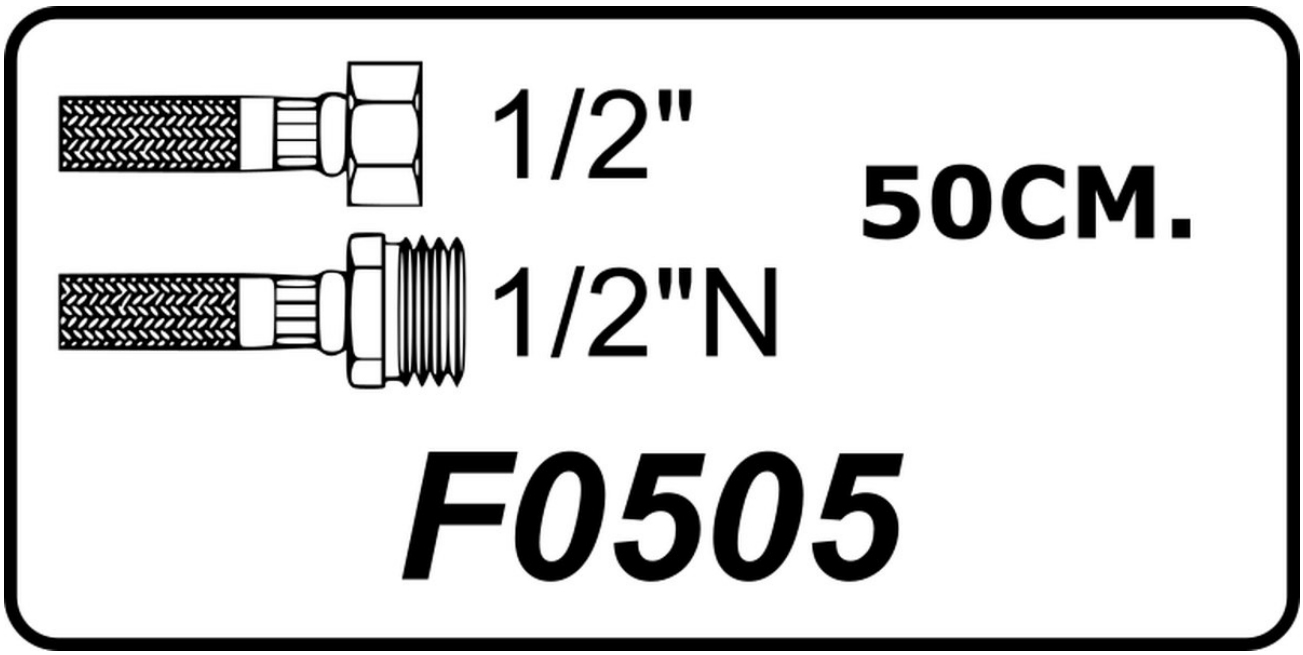

Confirm finish, quantity and destination with your quotation.

F0506 - FLEKS HORTUM 1/2"-1/2"N 60CM.

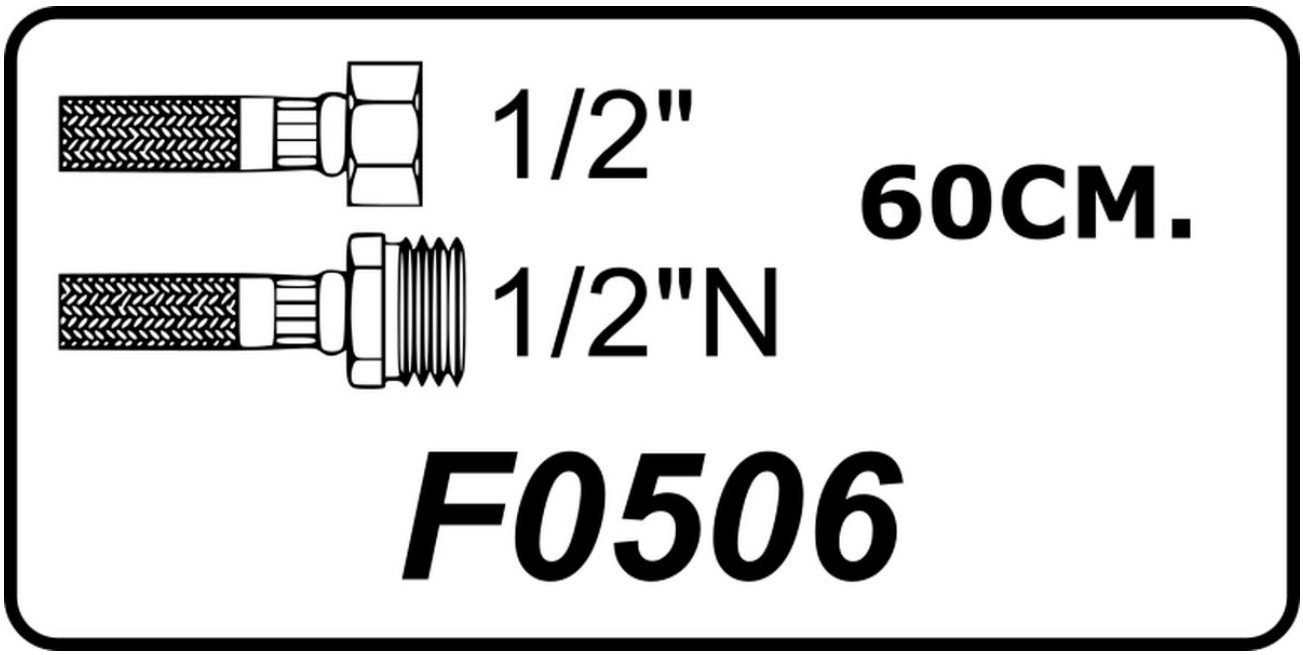

Confirm finish, quantity and destination with your quotation.

F0507 - FLEKS HORTUM 1/2"-1/2"N 70CM.

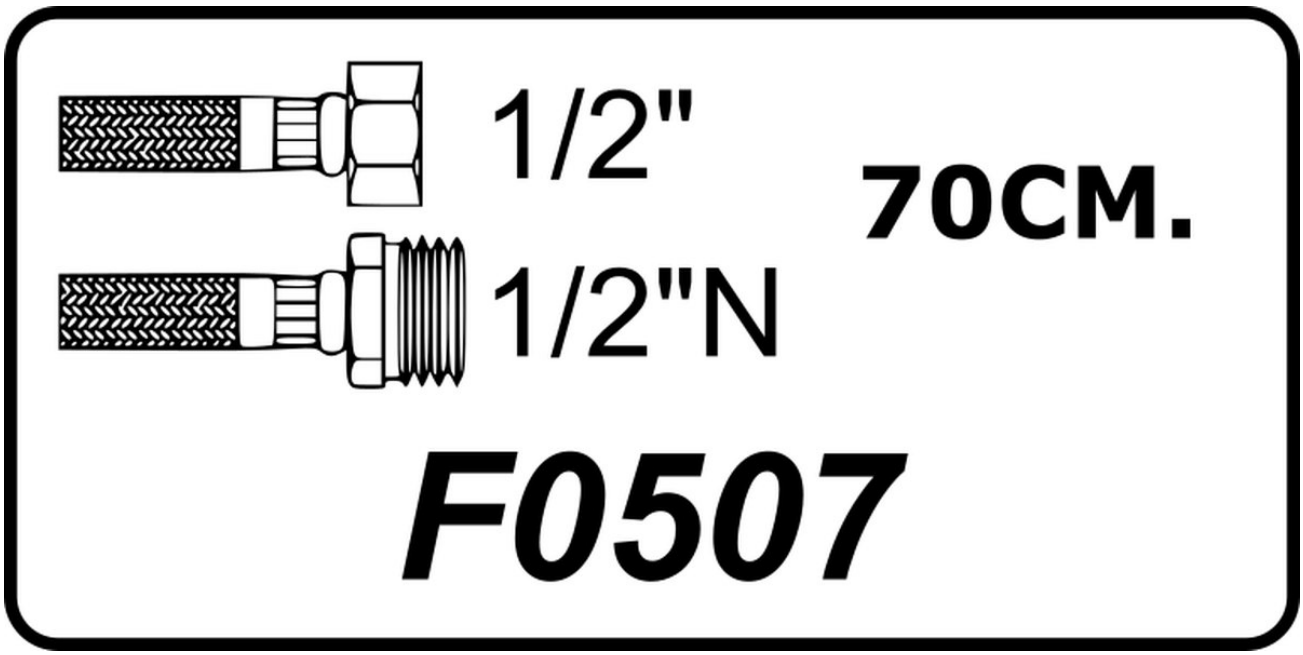

Confirm finish, quantity and destination with your quotation.

F0508 - FLEKS HORTUM 1/2"-1/2"N 80CM.

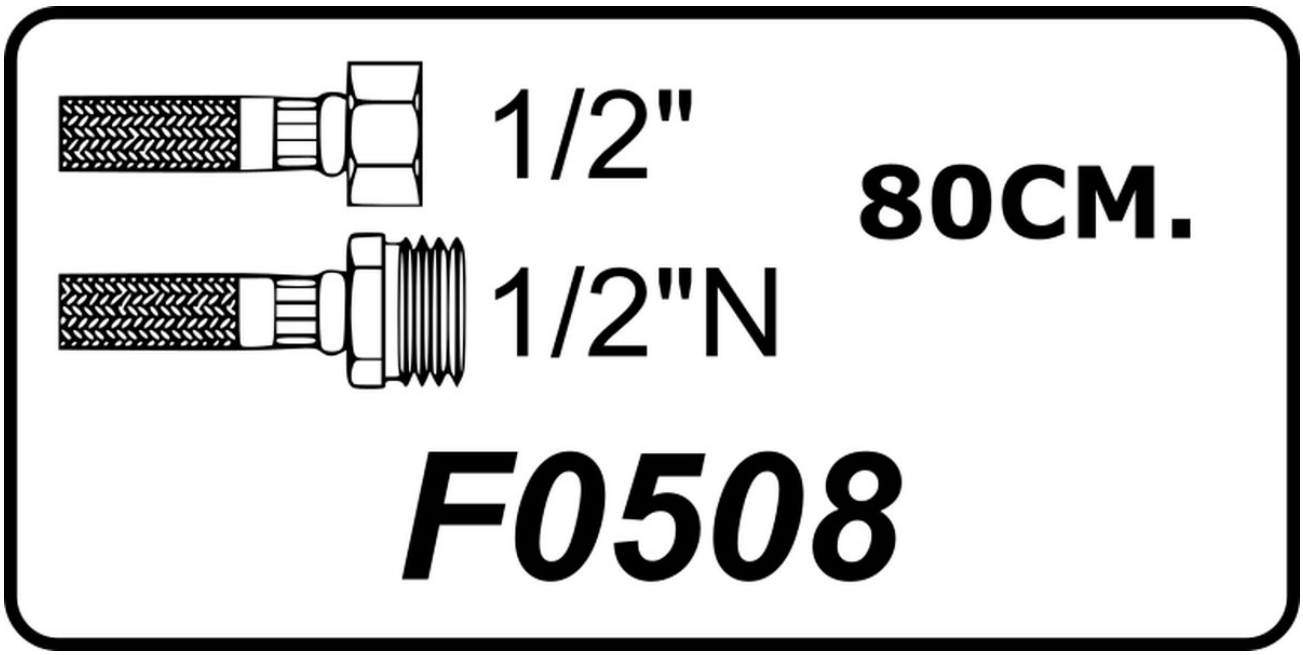

Confirm finish, quantity and destination with your quotation.

F0509 - FLEKS HORTUM 1/2"-1/2"N 90CM.

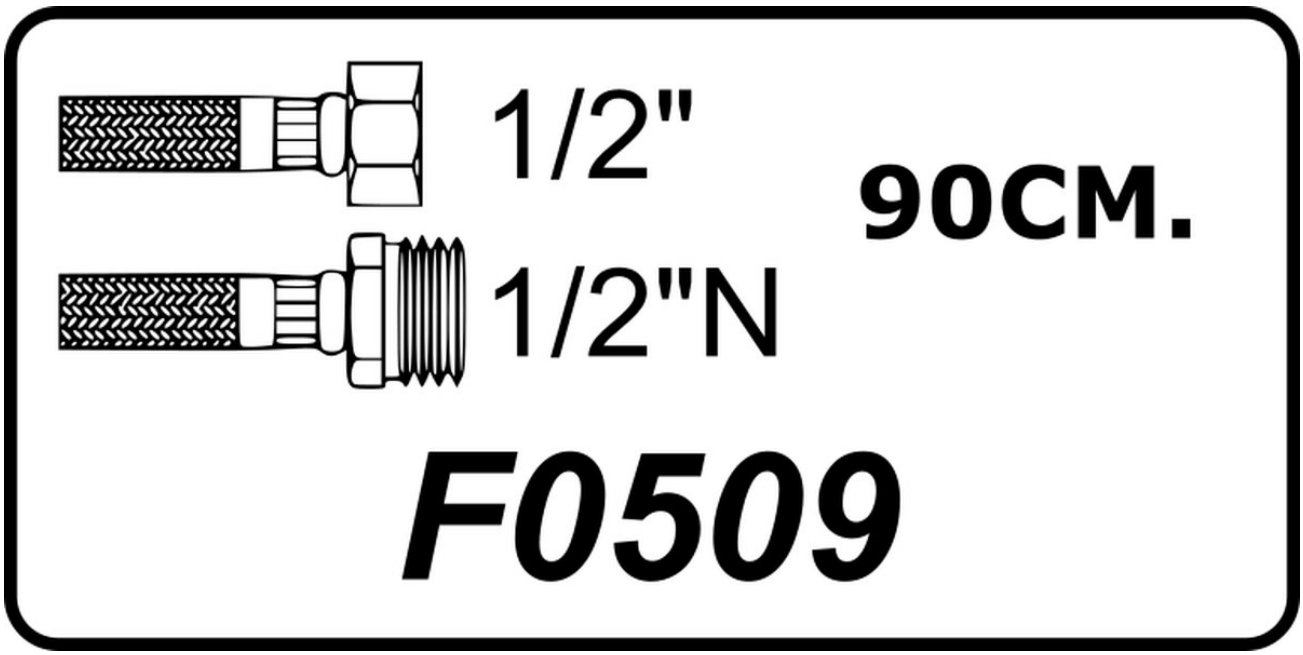

Confirm finish, quantity and destination with your quotation.

F0510 - FLEKS HORTUM 1/2"-1/2"N 100CM.

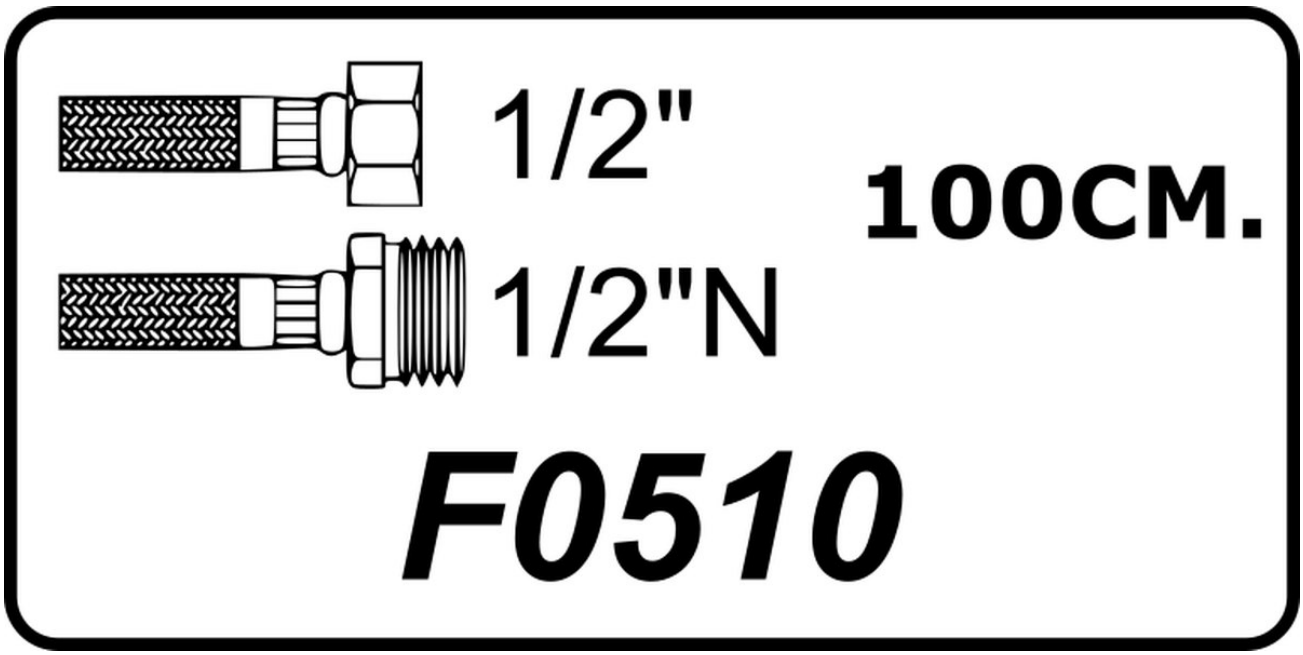

Confirm finish, quantity and destination with your quotation.

M3401 - MIX SELENİT BANYO BATARYASI

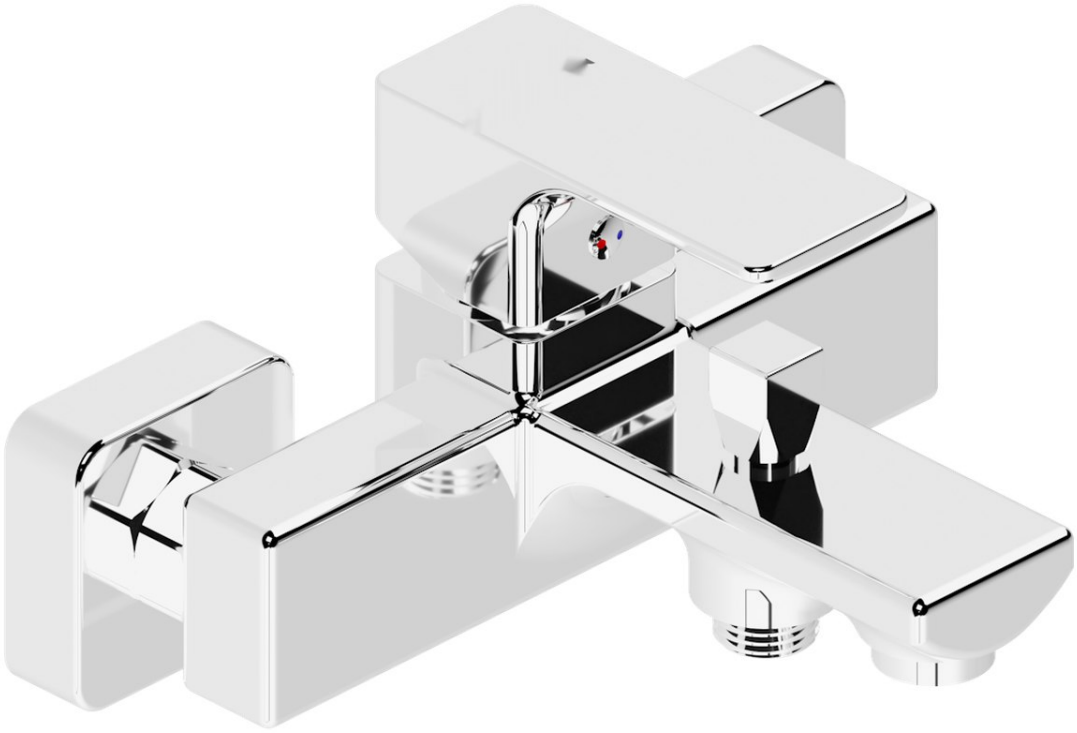

Chrome

Confirm finish, quantity and destination with your quotation.

M3402 - MIX SELENİT LAVABO BATARYASI



Chrome

Confirm finish, quantity and destination with your quotation.

M3404 - MIX SELENİT KUĞU EVYE BATARYASI



Chrome

Confirm finish, quantity and destination with your quotation.

M3301 - MIX ATLANTİS BANYO BATARYASI

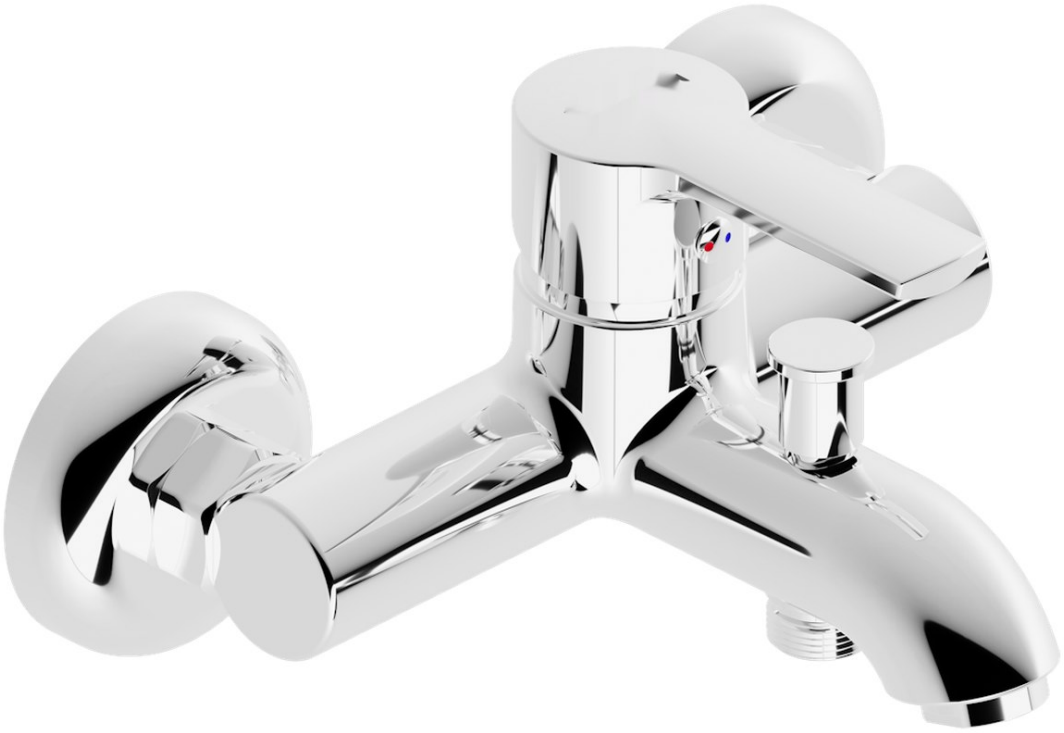

Chrome

Confirm finish, quantity and destination with your quotation.

M3303 - MIX ATLANTİS KUĞU LAVABO BATARYASI



Chrome

Confirm finish, quantity and destination with your quotation.

M3304 - MIX ATLANTİS KUĞU EVYE BATARYASI



Chrome

Confirm finish, quantity and destination with your quotation.

M3312 - MIX ATLANTİS YÜKSEK LAVABO BATARYASI



Chrome

Confirm finish, quantity and destination with your quotation.

CARBOGA

Mixer taps / ATLANTİS

M3316 - MIX ATLANTİS ÇANAK LAVABO BATARYASI



Chrome

Confirm finish, quantity and destination with your quotation.

CARBOGA

shaping future

Request a quotation

Send model codes, finish, quantity and destination country.

info@carboga.com

+90 532 160 29 56

https://carboga.com

Giyimkent Business Center, 16th Street No: 37/B

Esenler, Istanbul, Türkiye