CARBOGA

shaping future

Mixer taps

187 models · 2026



Water fixtures · Mixers · Accessories

carboga.com | info@carboga.com

CARBOGA

Model index

M3001 - MIX ONİKS BANYO BATARYASI 7
M3004 - MIX ONİKS KUĞU EVYE BATARYASI 8
M3004.10 - MIX ONİKS KUĞU EVYE BATARYASI 2 9
M3004.20 - MIX ONİKS KUĞU EVYE BATARYASI 3 10
M3004.30 - MIX ONİKS KUĞU EVYE BATARYASI 4 11
M3004.40 - MIX ONİKS KUĞU EVYE BATARYASI 5 12
M3007 - MIX ONİKS APLİKE EVYE BATARYASI 13
M3008 - MIX ONİKS DUŞ BATARYASI 14
M3012 - MIX ONİKS YÜKSEK LAVABO BATARYASI 15
M3014 - MIX ONİKS DUVARDAN EVYE BATARYASI 16
M3014.10 - MIX ONİKS DUVARDAN EVYE BATARYASI 2 17
M3019 - MIX ONİKS ŞATAF BATARYASI 18
M2901 - MIX GALEN BANYO BATARYASI 19
M2902 - MIX GALEN LAVABO BATARYASI 20
M2903 - MIX GALEN KUĞU LAVABO BATARYASI 21
M2904 - MIX GALEN KUĞU EVYE BATARYASI 22
M2908 - MIX GALEN DUŞ BATARYASI 23
M2914 - MIX GALEN DUVARDAN EVYE BATARYASI 24
M2915 - MIX GALEN BİDE BATARYASI 25
M2401 - MIX BERİL BANYO BATARYASI 26
M2402 - MIX BERİL LAVABO BATARYASI 27
M2403 - MIX BERİL KUĞU LAVABO BATARYASI 28
M2404 - MIX BERİL KUĞU EVYE BATARYASI 29
M2404.10 - MIX BERİL KUĞU EVYE BATARYASI 2 30
M2408 - MIX BERİL DUŞ BATARYASI 31
M2412 - MIX BERİL YÜKSEK LAVABO BATARYASI 32
M2414 - MIX BERİL DUVARDAN EVYE BATARYASI 33
M2416 - MIX BERİL ÇANAK LAVABO BATARYASI 34
M2417 - MIX BERİL SPİRALLİ EVYE BATARYASI 35
M2417.10 - MIX BERİL SPİRALLİ EVYE BATARYASI-2 36
M2417.20 - MIX BERİL SPİRALLİ EVYE BATARYASI-3 37
M2417.30 - MIX BERİL SPİRALLİ EVYE BATARYASI-4 38
M2417.40 - MIX BERİL SPİRALLİ EVYE BATARYASI-5 39
M2301 - MIX KEHRİBAR BANYO BATARYASI 40
M2302 - MIX KEHRİBAR LAVABO BATARYASI 41
M2303 - MIX KEHRİBAR KUĞU LAVABO BATARYASI 42
M2304 - MIX KEHRİBAR KUĞU EVYE BATARYASI 43
M2304.10 - MIX KEHRİBAR KUĞU EVYE BATARYASI 2 44

CARBOGA

Model index

M2307 - MIX KEHRİBAR APLİKE EVYE BATARYASI 45
M2308 - MIX KEHRİBAR DUŞ BATARYASI 46
M2312 - MIX KEHRİBAR YÜKSEK LAVABO BATARYASI 47
M2314 - MIX KEHRİBAR DUVARDAN EVYE BATARYASI 48
M2501 - MIX KORAL BANYO BATARYASI 49
M2502 - MIX KORAL LAVABO BATARYASI 50
M2504 - MIX KORAL KUĞU EVYE BATARYASI 51
M2504.10 - MIX KORAL KUĞU EVYE BATARYASI 2 52
M2507 - MIX KORAL APLİKE EVYE BATARYASI 53
M2508 - MIX KORAL DUŞ BATARYASI 54
M2516 - MIX KORAL ÇANAK LAVABO BATARYASI 55
M1501 - MIX AKİK BANYO BATARYASI 56
M1502 - MIX AKİK LAVABO BATARYASI 57
M1504 - MIX AKİK KUĞU EVYE BATARYASI 58
M1507 - MIX AKİK APLİKE EVYE BATARYASI 59
M1508 - MIX AKİK DUŞ BATARYASI 60
M1401 - MIX GARNET BANYO BATARYASI 61
M1402 - MIX GARNET LAVABO BATARYASI 62
M1403.10 - MIX GARNET KUĞU LAVABO BATARYASI 63
M1404.10 - MIX GARNET KUĞU EVYE BATARYASI 2 64
M1404 - MIX GARNET KUĞU EVYE BATARYASI 65
M1407 - MIX GARNET APLİKE EVYE BATARYASI 66
M1408 - MIX GARNET DUŞ BATARYASI 67
M1201 - MIX KUVARS BANYO BATARYASI 68
M1202 - MIX KUVARS LAVABO BATARYASI 69
M1204 - MIX KUVARS KUĞU EVYE BATARYASI 70
M1204.10 - MIX KUVARS KUĞU EVYE BATARYASI 2 71
M1207 - MIX KUVARS APLİKE EVYE BATARYASI 72
M1208 - MIX KUVARS DUŞ BATARYASI 73
M1215 - MIX KUVARS BİDE BATARYASI 74
M1216 - MIX KUVARS ÇANAK LAVABO BATARYASI 75
M1217 - MIX KUVARS HELEZONLU EVYE BATARYASI 76
M1219 - MIX KUVARS ŞATAF BATARYASI 77
M2001 - MIX UZAY BANYO BATARYASI 78
M2002 - MIX UZAY LAVABO BATARYASI 79
M2003 - MIX UZAY KUĞU LAVABO BATARYASI 80
M2004 - MIX UZAY KUĞU EVYE BATARYASI 81
M2005 - MIX UZAY DÖNER LAVABO BATARYASI 82

CARBOGA

Model index

M2007 - MIX UZAY APLİKE EVYE BATARYASI 83
M2008 - MIX UZAY DUŞ BATARYASI 84
M1301 - MIX TURKUAZ BANYO BATARYASI 85
M1302 - MIX TURKUAZ LAVABO BATARYASI 86
M1303 - MIX TURKUAZ KUĞU LAVABO BATARYASI 87
M1304 - MIX TURKUAZ KUĞU EVYE BATARYASI 88
M1307 - MIX TURKUAZ APLİKE EVYE BATARYASI 89
M1308 - MIX TURKUAZ DUŞ BATARYASI 90
M1312 - MIX TURKUAZ YÜKSEK LAVABO BATARYASI 91
M1314 - MIX TURKUAZ DUVARDAN EVYE BATARYASI 92
M2601 - MIX FLORİT BANYO BATARYASI 93
M2602 - MIX FLORİT LAVABO BATARYASI 94
M2603 - MIX FLORİT KUĞU LAVABO BATARYASI 95
M2604 - MIX FLORİT KUĞU EVYE BATARYASI 96
M2607 - MIX FLORİT APLİKE EVYE BATARYASI 97
M2608 - MIX FLORİT DUŞ BATARYASI 98
M2201 - MIX AY BANYO BATARYASI 99
M2203 - MIX AY KUĞU LAVABO BATARYASI 100
M2204 - MIX AY KUĞU EVYE BATARYASI 101
M2207 - MIX AY APLİKE EVYE BATARYASI 102
M2208 - MIX AY DUŞ BATARYASI 103
M2212 - MIX AY YÜKSEK LAVABO BATARYASI 104
M2214 - MIX AY DUVARDAN EVYE BATARYASI 105
M2101 - MIX FEZA BANYO BATARYASI 106
M2102 - MIX FEZA LAVABO BATARYASI 107
M2103 - MIX FEZA KUĞU LAVABO BATARYASI 108
M2104 - MIX FEZA KUĞU EVYE BATARYASI 109
M2107 - MIX FEZA APLİKE EVYE BATARYASI 110
M2108 - MIX FEZA DUŞ BATARYASI 111
M1101 - MIX YAKUT BANYO BATARYASI 112
M1103 - MIX YAKUT KUĞU LAVABO BATARYASI 113
M1104 - MIX YAKUT KUĞU EVYE BATARYASI 114
M1107 - MIX YAKUT APLİKE EVYE BATARYASI 115
M1108 - MIX YAKUT DUŞ BATARYASI 116
M1112 - MIX YAKUT YÜKSEK LAVABO BATARYASI 117
M1115 - MIX YAKUT BİDE BATARYASI 118
M1116 - MIX YAKUT ÇANAK LAVABO BATARYASI 119
M1801 - MIX OLTU BANYO BATARYASI 120

CARBOGA

Model index

M1802 - MIX OLTU LAVABO BATARYASI 121
M1803 - MIX OLTU KUĞU LAVABO BATARYASI 122
M1804 - MIX OLTU KUĞU EVYE BATARYASI 123
M1805 - MIX OLTU DÖNER LAVABO BATARYASI 124
M1806 - MIX OLTU DÖNER EVYE BATARYASI 125
M1807 - MIX OLTU APLİKE EVYE BATARYASI 126
M1808 - MIX OLTU DUŞ BATARYASI 127
M1812 - MIX OLTU YÜKSEK LAVABO BATARYASI 128
M1814 - MIX OLTU DUVARDAN EVYE BATARYASI 129
M1818 - MIX OLTU BERBER BATARYASI 130
M1901 - MIX AMBER BANYO BATARYASI 131
M1902 - MIX AMBER LAVABO BATARYASI 132
M1903 - MIX AMBER KUĞU LAVABO BATARYASI 133
M1904 - MIX AMBER KUĞU EVYEBATARYASI 134
M1905 - MIX AMBER DÖNER LAVABO BATARYASI 135
M1906 - MIX AMBER DÖNER EVYE BATARYASI 136
M1907 - MIX AMBER APLİKE EVYE BATARYASI 137
M1908 - MIX AMBER DUŞ BATARYASI 138
M1912 - MIX AMBER YÜKSEK LAVABO BATARYASI 139
M1919 - MIX AMBER ŞATAF BATARYASI 140
M1001 - MIX YEŞİM BANYO BATARYASI 141
M1002 - MIX YEŞİM LAVABO BATARYASI 142
M1003 - MIX YEŞİM KUĞU LAVABO BATARYASI 143
M1004 - MIX YEŞİM KUĞU EVYEBATARYASI 144
M1007 - MIX YEŞİM APLİKE EVYE BATARYASI 145
M1008 - MIX YEŞİM DUŞ BATARYASI 146
M1601 - MIX İNCİ BANYO BATARYASI 147
M1602 - MIX İNCİ LAVABO BATARYASI 148
M1603 - MIX İNCİ KUĞU LAVABO BATARYASI 149
M1604 - MIX İNCİ KUĞU EVYE BATARYASI 150
M1607 - MIX İNCİ APLİKE EVYE BATARYASI 151
M1608 - MIX İNCİ DUŞ BATARYASI 152
M1612 - MIX İNCİYÜKSEK LAVABO BATARYASI 153
M1619 - MIX İNCİ ŞATAF BATARYASI 154
M0901 - MIX SAFİR BANYO BATARYASI 155
M0902 - MIX SAFİR LAVABO BATARYASI 156
M0903 - MIX SAFİR KUĞU LAVABO BATARYASI 157
M0904 - MIX SAFİR KUĞU EVYE BATARYASI 158

CARBOGA

Model index

M0907 - MIX SAFİR APLİKE EVYE BATARYASI 159
M0908 - MIX SAFİR DUŞ BATARYASI 160
M0912 - MIX SAFİR YÜKSEK LAVABO BATARYASI 161
M0919 - MIX SAFİR ŞATAF BATARYASI 162
M1701 - MIX MERCAN BANYO BATARYASI 163
M1702 - MIX MERCAN LAVABO BATARYASI 164
M1703 - MIX MERCAN KUĞU LAVABO BATARYASI 165
M1704 - MIX MERCAN KUĞU EVYE BATARYASI 166
M1707 - MIX MERCAN APLİKE EVYE BATARYASI 167
M1708 - MIX MERCAN DUŞ BATARYASI 168
M1719 - MIX MERCAN ŞATAF BATARYASI 169
M2805.101 - MIX SPİNEL DÖNER LAVABO BATARYASI 1 170
M2805.102 - MIX SPİNEL DÖNER LAVABO BATARYASI 2 171
M2805.103 - MIX SPİNEL DÖNER LAVABO BATARYASI 3 172
M2805.211 - MIX SPİNEL DÖNER LAVABO BATARYASI 4 173
M2805.212 - MIX SPİNEL DÖNER LAVABO BATARYASI 5 174
M2805.213 - MIX SPİNEL DÖNER LAVABO BATARYASI 6 175
M2702 - MIX MONO LAVABO BATARYASI 176
M2704 - MIX MONO KUĞU EVYE BATARYASI 177
M2709 - MIX MONO UZUN MUSLUK 178
M2710 - MIX MONO MERMERÜSTÜ EVYE BATARYASI 1 179
M2710.10 - MIX MONO MERMERÜSTÜ EVYE BATARYASI 2 180
M2711 - MIX MONO MERMERÜSTÜ LAVABO BATARYASI 181
M2714 - MIX MONO DUVARDAN EVYE BATARYASI 182
M3017 - MIX LAPİS HELEZONLU EVYE BATARYASI 183
M3120 - MIX TOPAZ ESNEK BORULU EVYE BATARYASI 184
M3221 - MIX OPAL ARTMALI EVYE BATARYASI 185
M3401 - MIX SELENİT BANYO BATARYASI 186
M3402 - MIX SELENİT LAVABO BATARYASI 187
M3404 - MIX SELENİT KUĞU EVYE BATARYASI 188
M3301 - MIX ATLANTİS BANYO BATARYASI 189
M3303 - MIX ATLANTİS KUĞU LAVABO BATARYASI 190
M3304 - MIX ATLANTİS KUĞU EVYE BATARYASI 191
M3312 - MIX ATLANTİS YÜKSEK LAVABO BATARYASI 192
M3316 - MIX ATLANTİS ÇANAK LAVABO BATARYASI 193

M3001 - MIX ONİKS BANYO BATARYASI

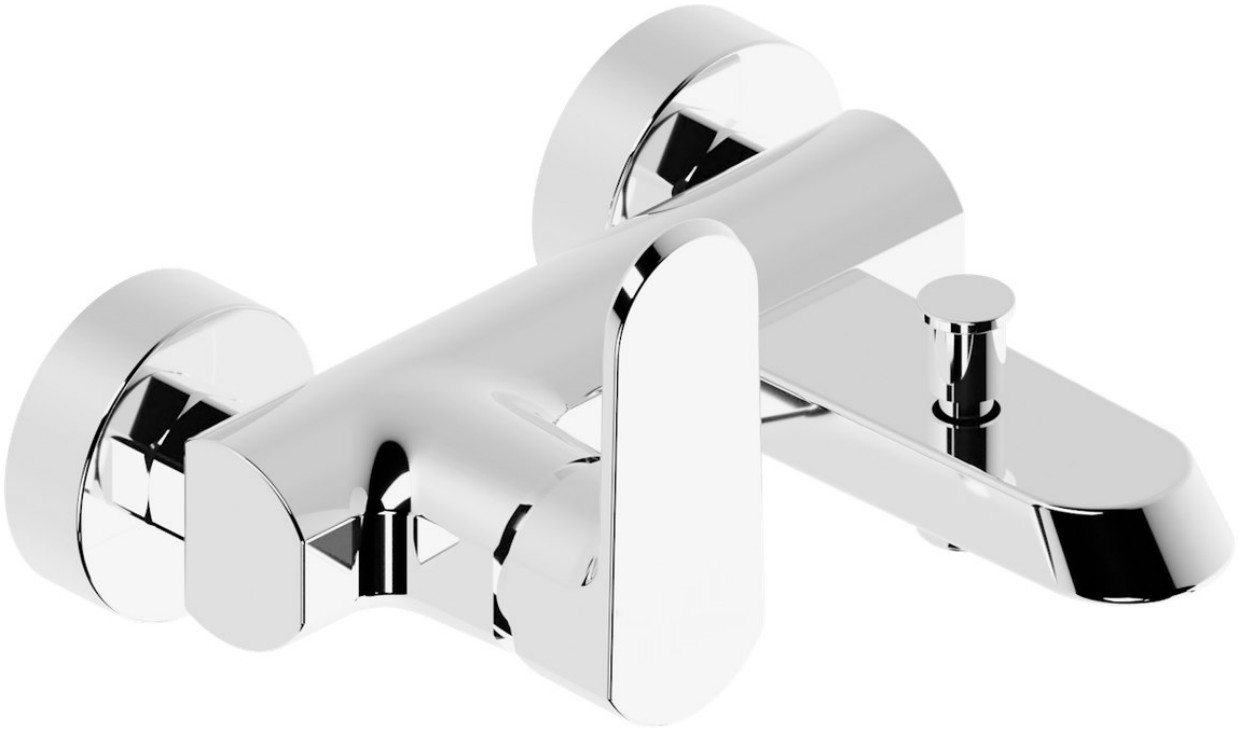

Chrome



Black

Confirm finish, quantity and destination with your quotation.

M3004 - MIX ONİKS KUĞU EVYE BATARYASI



Chrome

Confirm finish, quantity and destination with your quotation.

M3004.10 - MIX ONİKS KUĞU EVYE BATARYASI 2



Chrome - black flexible spout

Confirm finish, quantity and destination with your quotation.

M3004.20 - MIX ONİKS KUĞU EVYE BATARYASI 3



Chrome - white flexible spout

Confirm finish, quantity and destination with your quotation.

M3004.30 - MIX ONİKS KUĞU EVYE BATARYASI 4



Chrome - grey flexible spout

Confirm finish, quantity and destination with your quotation.

M3004.40 - MIX ONİKS KUĞU EVYE BATARYASI 5



Chrome



Black

Confirm finish, quantity and destination with your quotation.

M3007 - MIX ONİKS APLİKE EVYE BATARYASI



Chrome

Confirm finish, quantity and destination with your quotation.

M3008 - MIX ONİKS DUŞ BATARYASI



Chrome



Black

Confirm finish, quantity and destination with your quotation.

M3012 - MIX ONİKS YÜKSEK LAVABO BATARYASI



Chrome



Black

Confirm finish, quantity and destination with your quotation.

M3014 - MIX ONİKS DUVARDAN EVYE BATARYASI



Confirm finish, quantity and destination with your quotation.

M3014.10 - MIX ONİKS DUVARDAN EVYE BATARYASI 2



Chrome

Confirm finish, quantity and destination with your quotation.

M3019 - MIX ONİKS ŞATAF BATARYASI



Chrome

Confirm finish, quantity and destination with your quotation.

M2901 - MIX GALEN BANYO BATARYASI



Chrome



Black



White

Confirm finish, quantity and destination with your quotation.

M2902 - MIX GALEN LAVABO BATARYASI



Chrome



Black



White

Confirm finish, quantity and destination with your quotation.

M2903 - MIX GALEN KUĞU LAVABO BATARYASI



Chrome

Confirm finish, quantity and destination with your quotation.

M2904 - MIX GALEN KUĞU EVYE BATARYASI



Chrome

Confirm finish, quantity and destination with your quotation.

M2908 - MIX GALEN DUŞ BATARYASI



Chrome

Confirm finish, quantity and destination with your quotation.

M2914 - MIX GALEN DUVARDAN EVYE BATARYASI



Chrome



Black



White

Confirm finish, quantity and destination with your quotation.

M2915 - MIX GALEN BİDE BATARYASI



Chrome



White



Black

Confirm finish, quantity and destination with your quotation.

M2401 - MIX BERİL BANYO BATARYASI

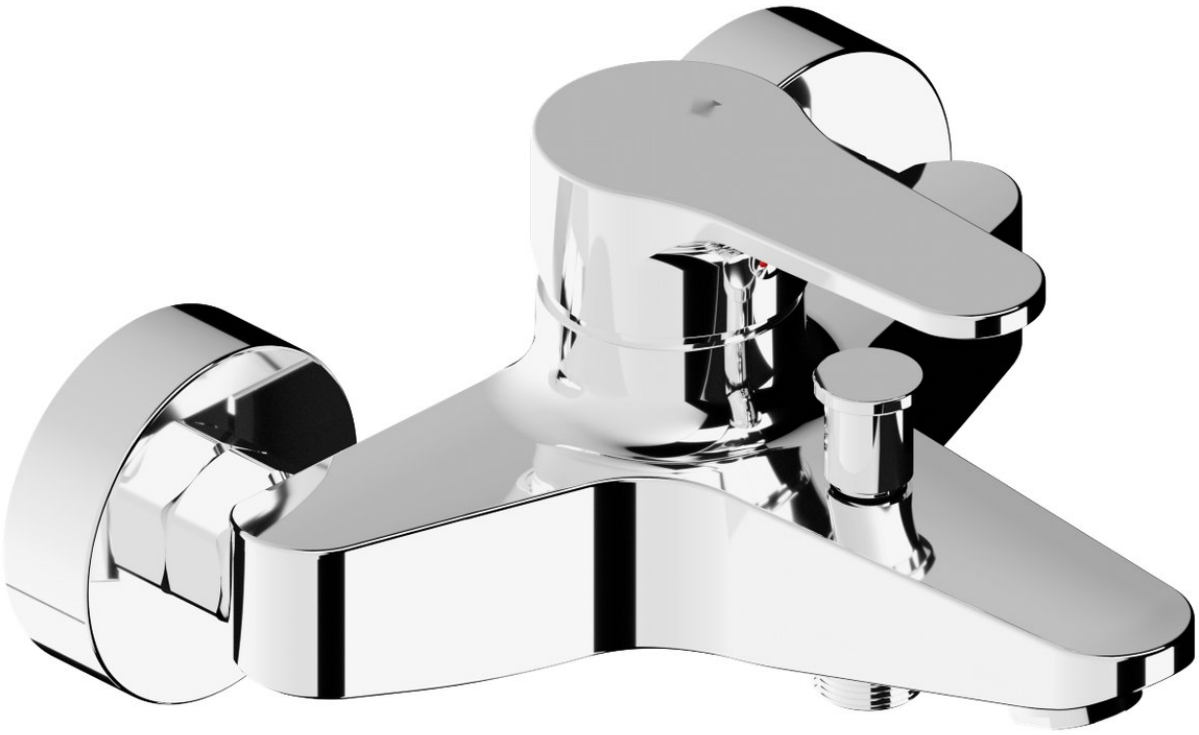

Chrome

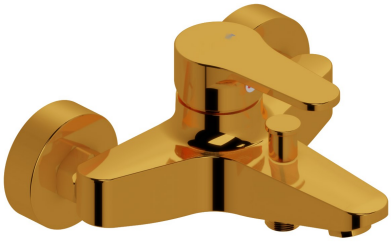

Gold



White

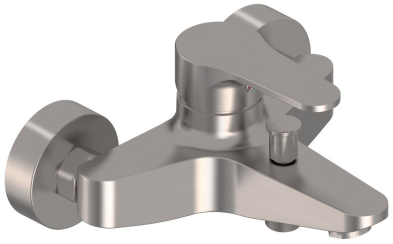

Satin



Beige granite



Anthracite



Black

Confirm finish, quantity and destination with your quotation.

M2402 - MIX BERİL LAVABO BATARYASI



Chrome



Gold



Anthracite



Black



Beige granite



Satin



White

Confirm finish, quantity and destination with your quotation.

M2403 - MIX BERİL KUĞU LAVABO BATARYASI



Chrome



Gold



Anthracite



Beige granite



Black granite



White granite



Black



Satin



White

Confirm finish, quantity and destination with your quotation.

M2404 - MIX BERİL KUĞU EVYE BATARYASI



Chrome



Gold



White granite



Anthracite



Black



Black granite



Beige granite



Satin



White

Confirm finish, quantity and destination with your quotation.

M2404.10 - MIX BERİL KUĞU EVYE BATARYASI 2



Chrome - black flexible spout



Chrome - white flexible spout



Chrome - grey flexible spout

Confirm finish, quantity and destination with your quotation.

M2408 - MIX BERİL DUŞ BATARYASI



Chrome

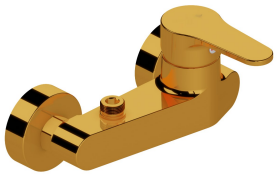

Gold



White granite



Black granite



Anthracite



Black



Beige granite

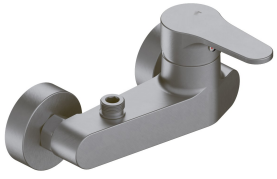

Satin



White

Confirm finish, quantity and destination with your quotation.

M2412 - MIX BERİL YÜKSEK LAVABO BATARYASI



Chrome



Gold



White granite



Black granite



Anthracite



Black



Beige granite



Satin



White

Confirm finish, quantity and destination with your quotation.

M2414 - MIX BERİL DUVARDAN EVYE BATARYASI



Chrome



Gold



Anthracite



Black granite



White granite



Black



Beige granite



Satin



White

Confirm finish, quantity and destination with your quotation.

M2416 - MIX BERİL ÇANAK LAVABO BATARYASI



Chrome



Black



White

Confirm finish, quantity and destination with your quotation.

M2417 - MIX BERİL SPİRALLİ EVYE BATARYASI



Chrome



Chrome

Confirm finish, quantity and destination with your quotation.

M2417.10 - MIX BERİL SPİRALLİ EVYE BATARYASI-2



Chrome



Chrome



Chrome

Confirm finish, quantity and destination with your quotation.

M2417.20 - MIX BERİL SPİRALLİ EVYE BATARYASI-3



Chrome



Chrome

Confirm finish, quantity and destination with your quotation.

M2417.30 - MIX BERİL SPİRALLİ EVYE BATARYASI-4



Chrome



Chrome

Confirm finish, quantity and destination with your quotation.

M2417.40 - MIX BERİL SPİRALLİ EVYE BATARYASI-5



Chrome



Chrome

Confirm finish, quantity and destination with your quotation.

M2301 - MIX KEHRİBAR BANYO BATARYASI

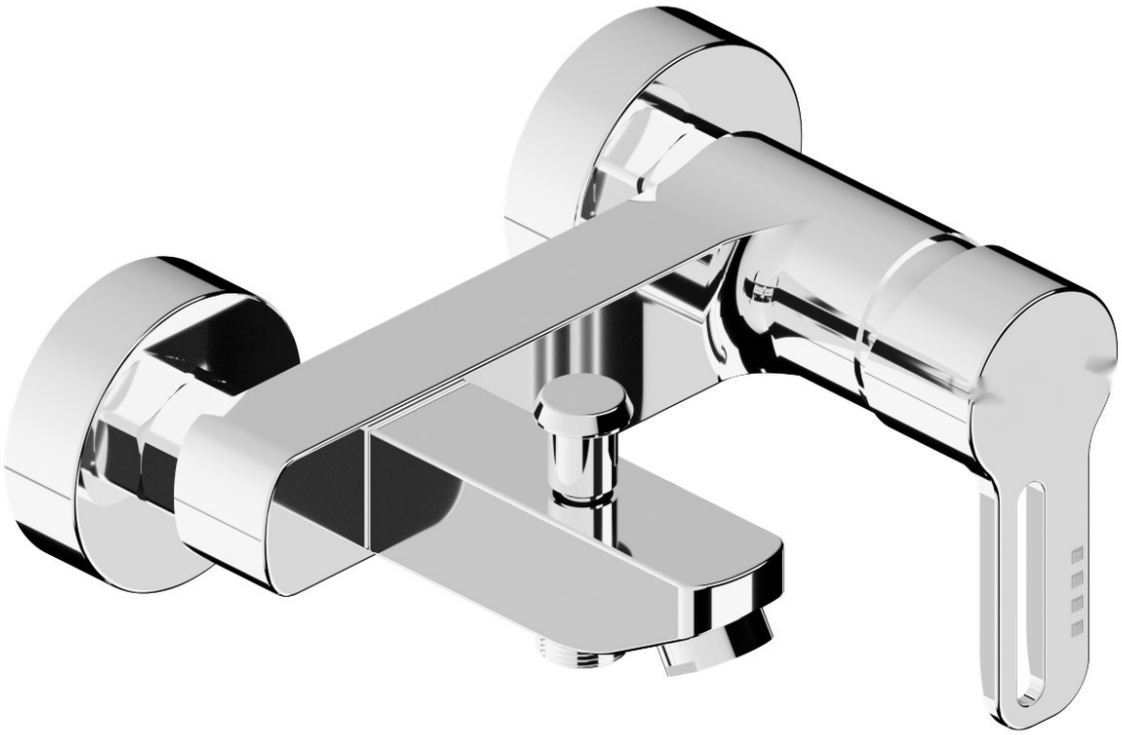

Chrome

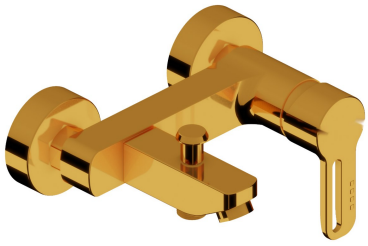

Gold

Confirm finish, quantity and destination with your quotation.

M2302 - MIX KEHRİBAR LAVABO BATARYASI



Chrome



Gold

Confirm finish, quantity and destination with your quotation.

M2303 - MIX KEHRİBAR KUĞU LAVABO BATARYASI



Chrome



Gold

Confirm finish, quantity and destination with your quotation.

M2304 - MIX KEHRİBAR KUĞU EVYE BATARYASI



Chrome



Gold

Confirm finish, quantity and destination with your quotation.

M2304.10 - MIX KEHRİBAR KUĞU EVYE BATARYASI 2



Chrome (black spout)



Gold (white spout)



Gold (grey spout)



Gold (black spout)



Chrome (grey spout)



Chrome (white spout)

Confirm finish, quantity and destination with your quotation.

M2307 - MIX KEHRİBAR APLİKE EVYE BATARYASI

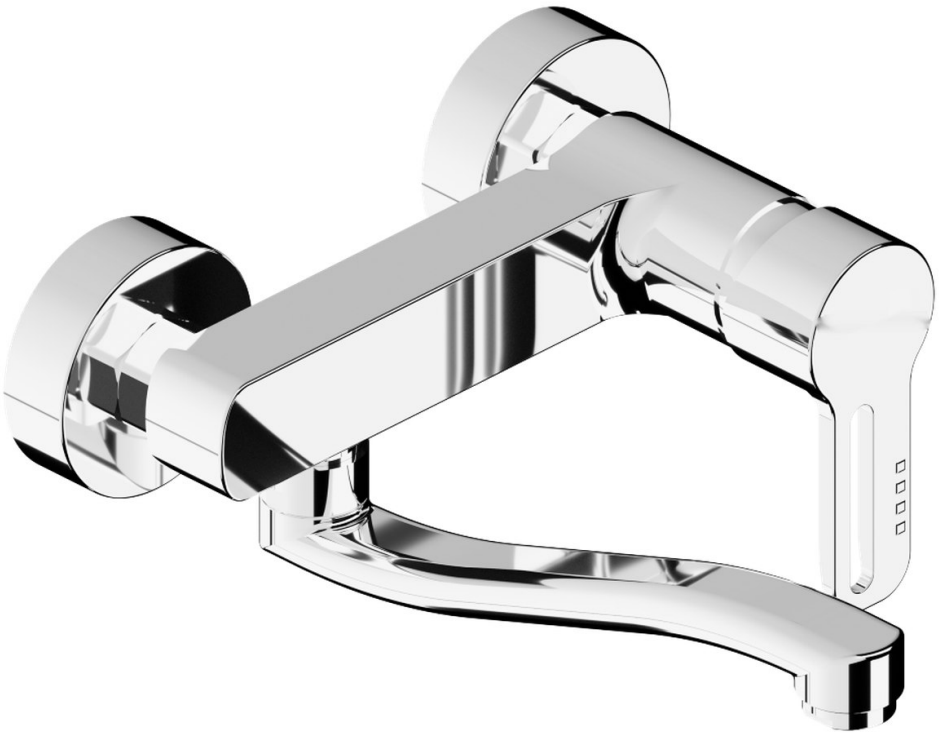

Chrome

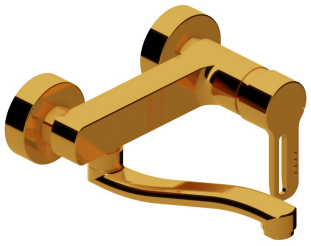

Gold

Confirm finish, quantity and destination with your quotation.

M2308 - MIX KEHRİBAR DUŞ BATARYASI



Chrome

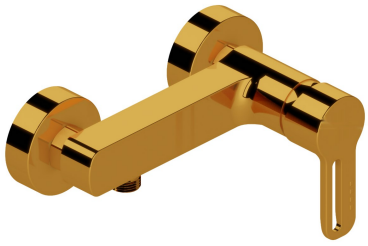

Gold

Confirm finish, quantity and destination with your quotation.

M2312 - MIX KEHRİBAR YÜKSEK LAVABO BATARYASI



Chrome

Confirm finish, quantity and destination with your quotation.

M2314 - MIX KEHRİBAR DUVARDAN EVYE BATARYASI



Chrome

Confirm finish, quantity and destination with your quotation.

M2501 - MIX KORAL BANYO BATARYASI

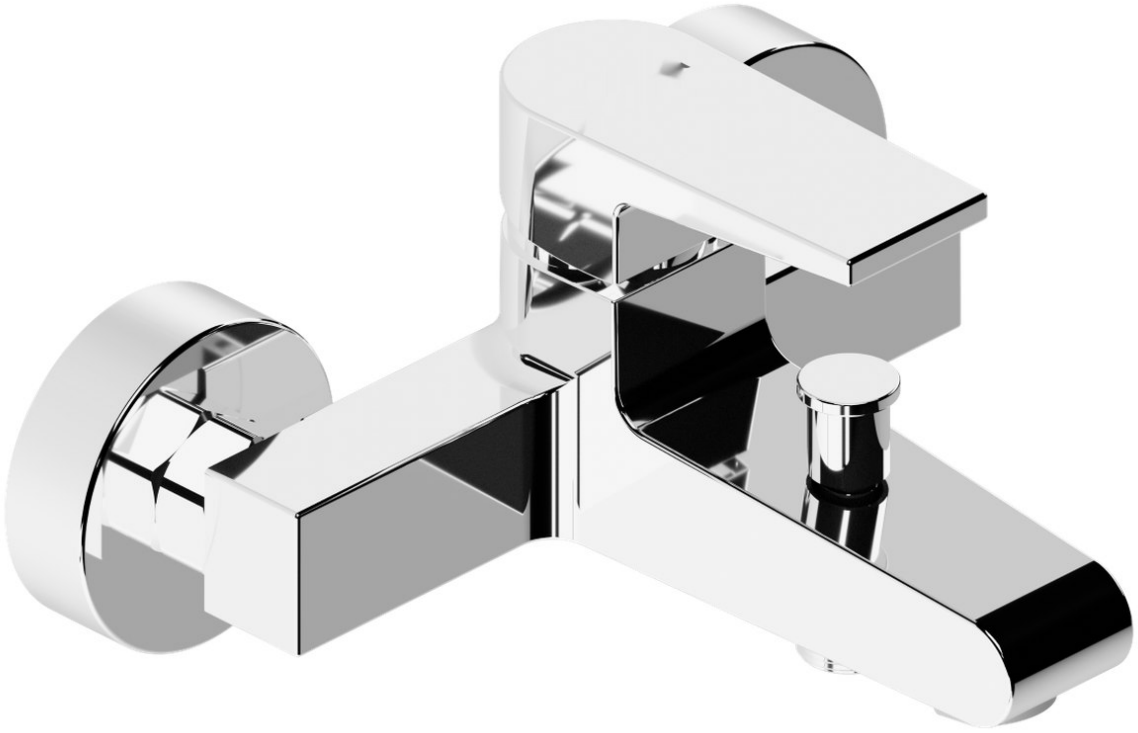

Chrome

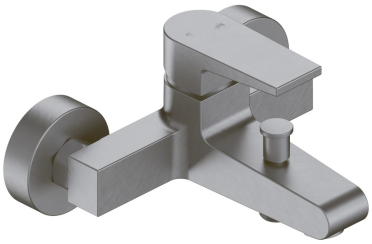

Satin



Black

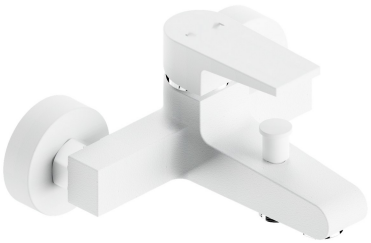

White

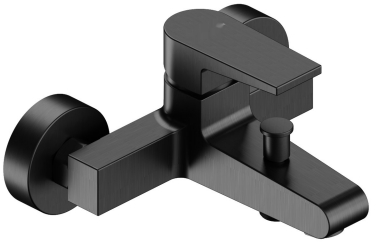

Anthracite

Confirm finish, quantity and destination with your quotation.

M2502 - MIX KORAL LAVABO BATARYASI



Chrome



Satin



Black



White



Anthracite

Confirm finish, quantity and destination with your quotation.

M2504 - MIX KORAL KUĞU EVYE BATARYASI



Chrome



Satin



Black



White



Anthracite

Confirm finish, quantity and destination with your quotation.

M2504.10 - MIX KORAL KUĞU EVYE BATARYASI 2



Chrome



Satin



White



Anthracite



Black

Confirm finish, quantity and destination with your quotation.

M2507 - MIX KORAL APLİKE EVYE BATARYASI



Chrome

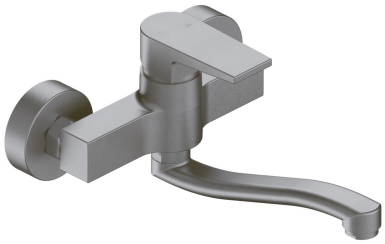

Satin



White



Black



Anthracite

Confirm finish, quantity and destination with your quotation.

M2508 - MIX KORAL DUŞ BATARYASI

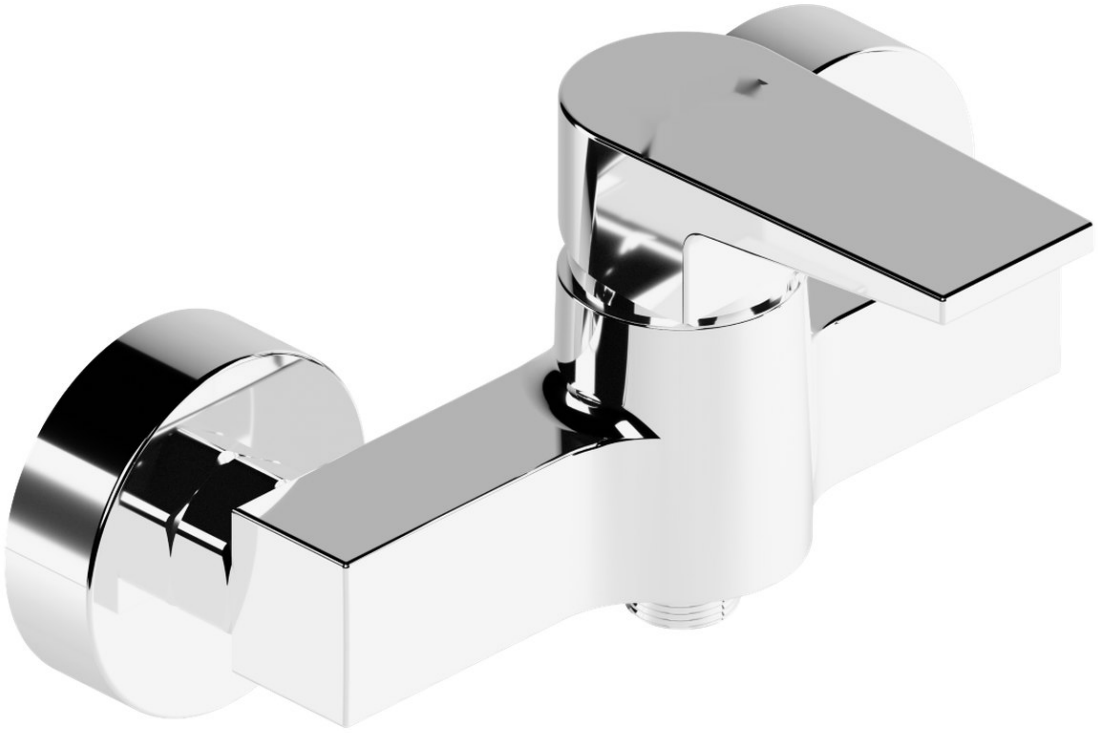

Chrome

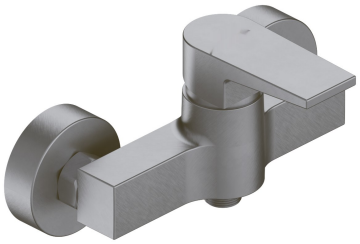

Satin



White



Black

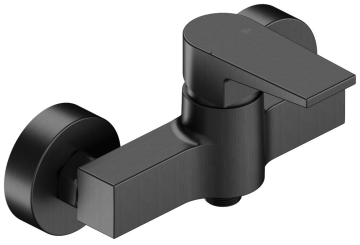

Anthracite

Confirm finish, quantity and destination with your quotation.

M2516 - MIX KORAL ÇANAK LAVABO BATARYASI



Chrome



Satin



Black



White



Anthracite

Confirm finish, quantity and destination with your quotation.

M1501 - MIX AKİK BANYO BATARYASI

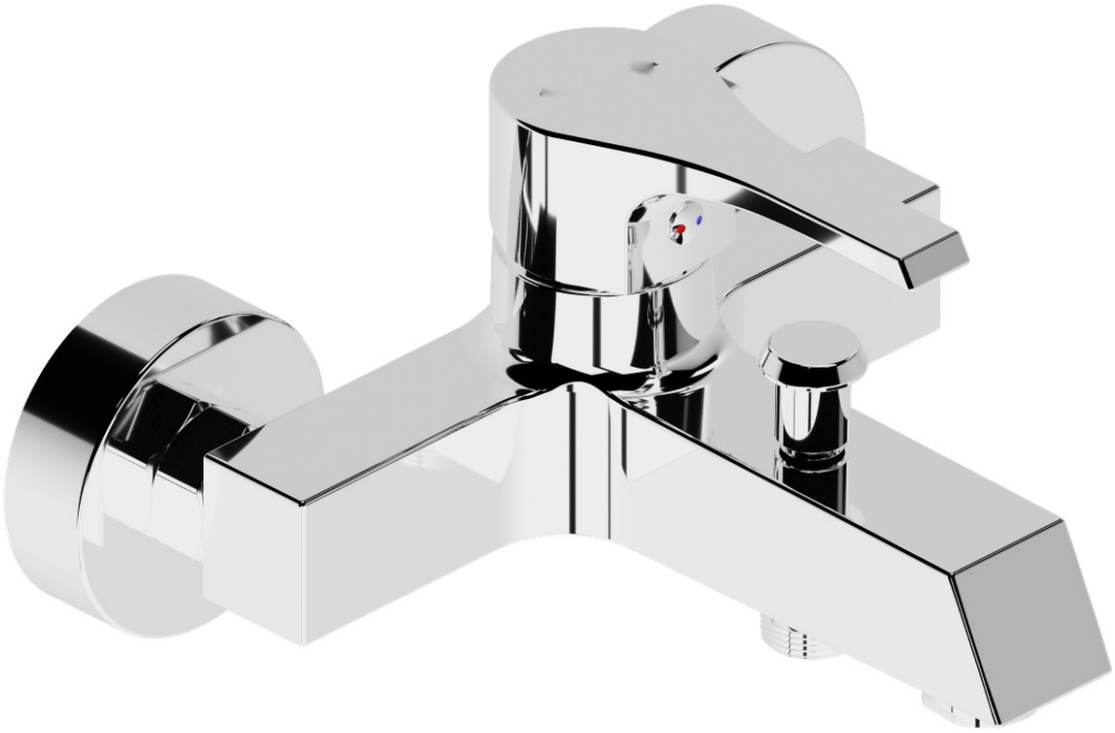

Chrome

Confirm finish, quantity and destination with your quotation.

M1502 - MIX AKİK LAVABO BATARYASI

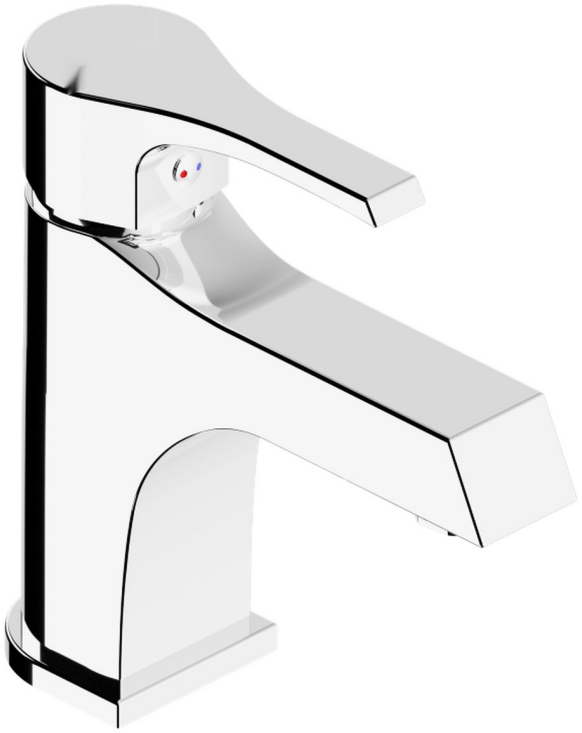

Chrome



Anthracite



Satin



Black



White

Confirm finish, quantity and destination with your quotation.

M1504 - MIX AKİK KUĞU EVYE BATARYASI



Chrome



Satin



White



Black



Anthracite

Confirm finish, quantity and destination with your quotation.

M1507 - MIX AKİK APLİKE EVYE BATARYASI

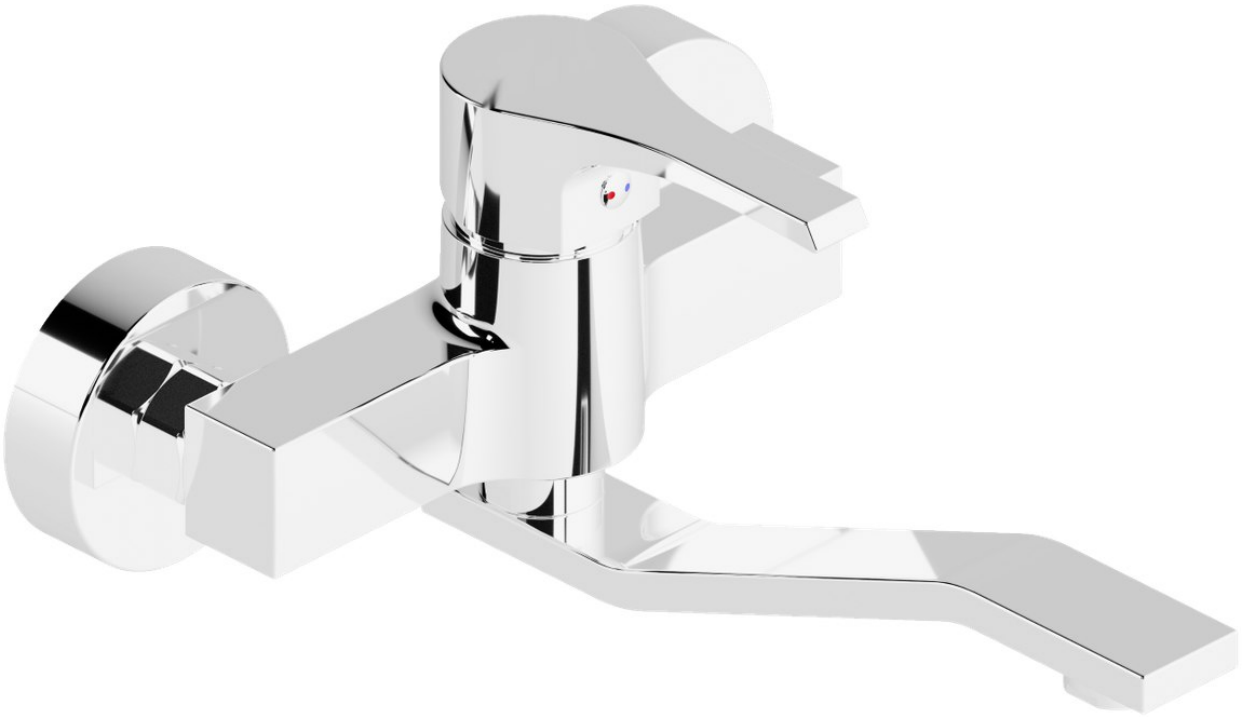

Chrome

Confirm finish, quantity and destination with your quotation.

M1508 - MIX AKİK DUŞ BATARYASI

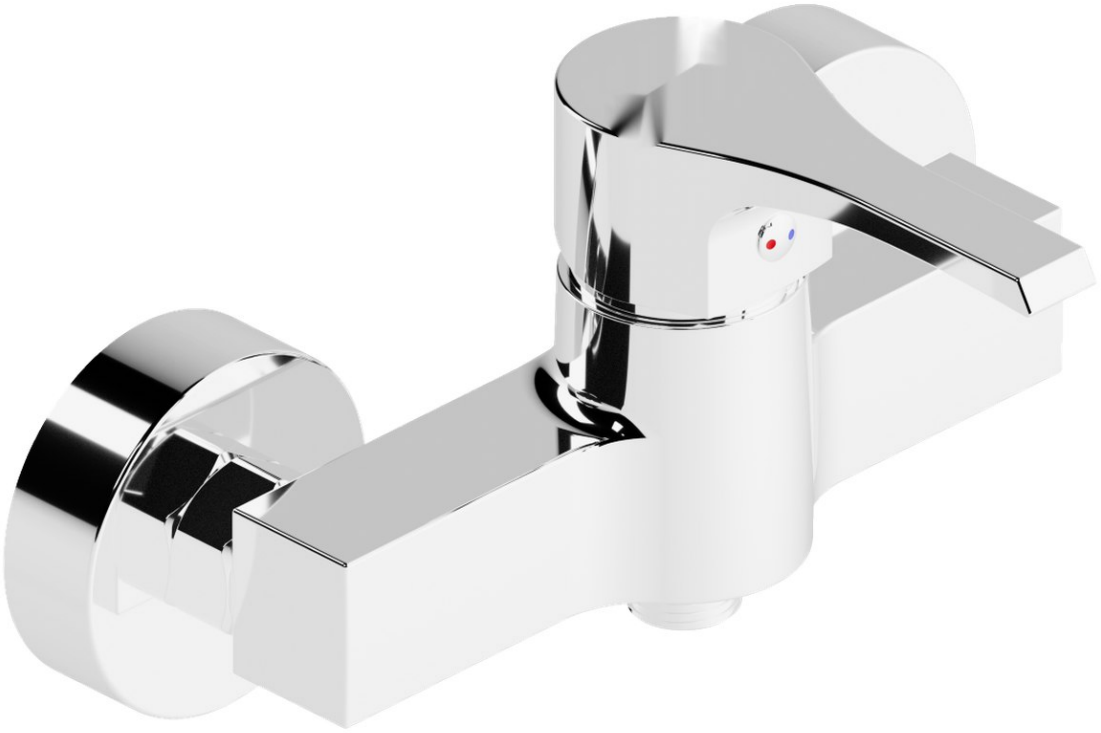

Chrome

Confirm finish, quantity and destination with your quotation.

M1401 - MIX GARNET BANYO BATARYASI



Chrome

Confirm finish, quantity and destination with your quotation.

M1402 - MIX GARNET LAVABO BATARYASI



Chrome

Confirm finish, quantity and destination with your quotation.

M1403.10 - MIX GARNET KUĞU LAVABO BATARYASI



Chrome

Confirm finish, quantity and destination with your quotation.

M1404.10 - MIX GARNET KUĞU EVYE BATARYASI 2



Chrome

Confirm finish, quantity and destination with your quotation.

M1404 - MIX GARNET KUĞU EVYE BATARYASI



Chrome

Confirm finish, quantity and destination with your quotation.

M1407 - MIX GARNET APLİKE EVYE BATARYASI



Chrome

Confirm finish, quantity and destination with your quotation.

M1408 - MIX GARNET DUŞ BATARYASI



Chrome

Confirm finish, quantity and destination with your quotation.

M1201 - MIX KUVARS BANYO BATARYASI

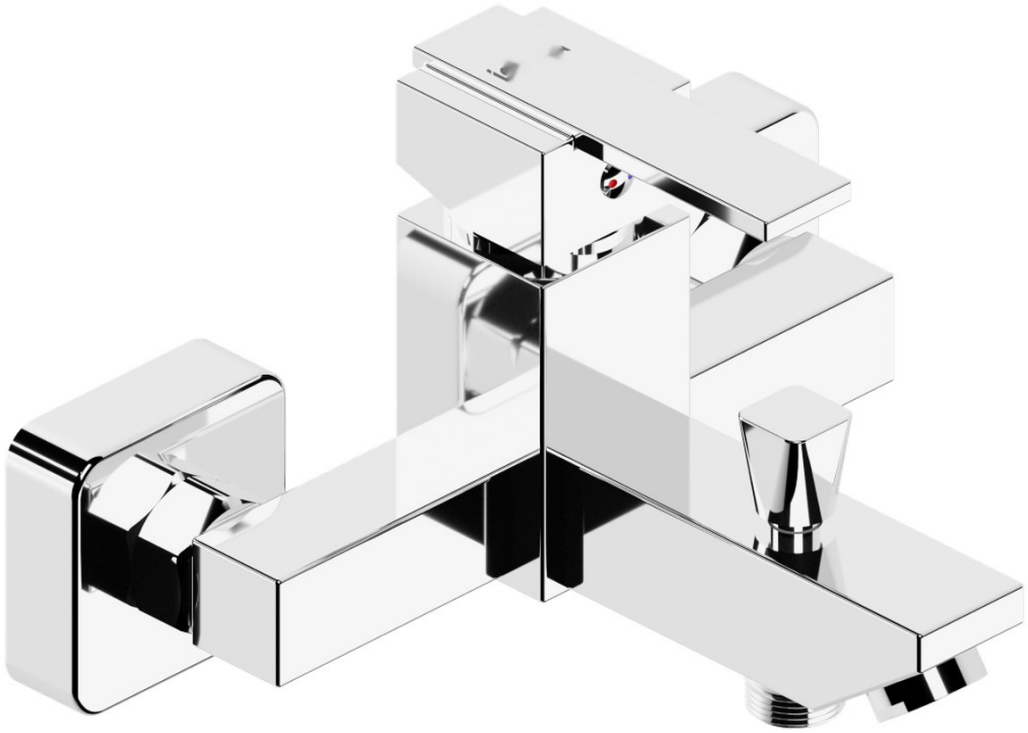

Chrome

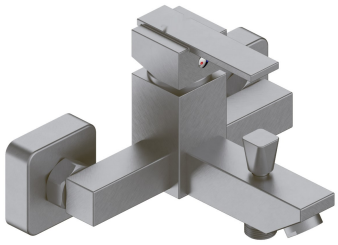

Satin

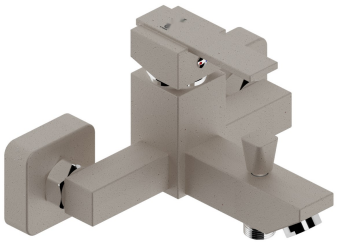

Beige granite

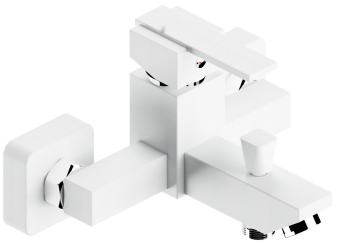

White



Black

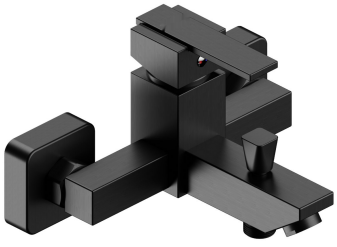

Anthracite

Confirm finish, quantity and destination with your quotation.

M1202 - MIX KUVARS LAVABO BATARYASI



Chrome



Black



White



Satin



Anthracite



Beige granite

Confirm finish, quantity and destination with your quotation.

M1204 - MIX KUVARS KUĞU EVYE BATARYASI



Chrome



Black

Confirm finish, quantity and destination with your quotation.

M1204.10 - MIX KUVARS KUĞU EVYE BATARYASI 2



Chrome



Anthracite



Black



Beige granite



Satin



White

Confirm finish, quantity and destination with your quotation.

M1207 - MIX KUVARS APLİKE EVYE BATARYASI

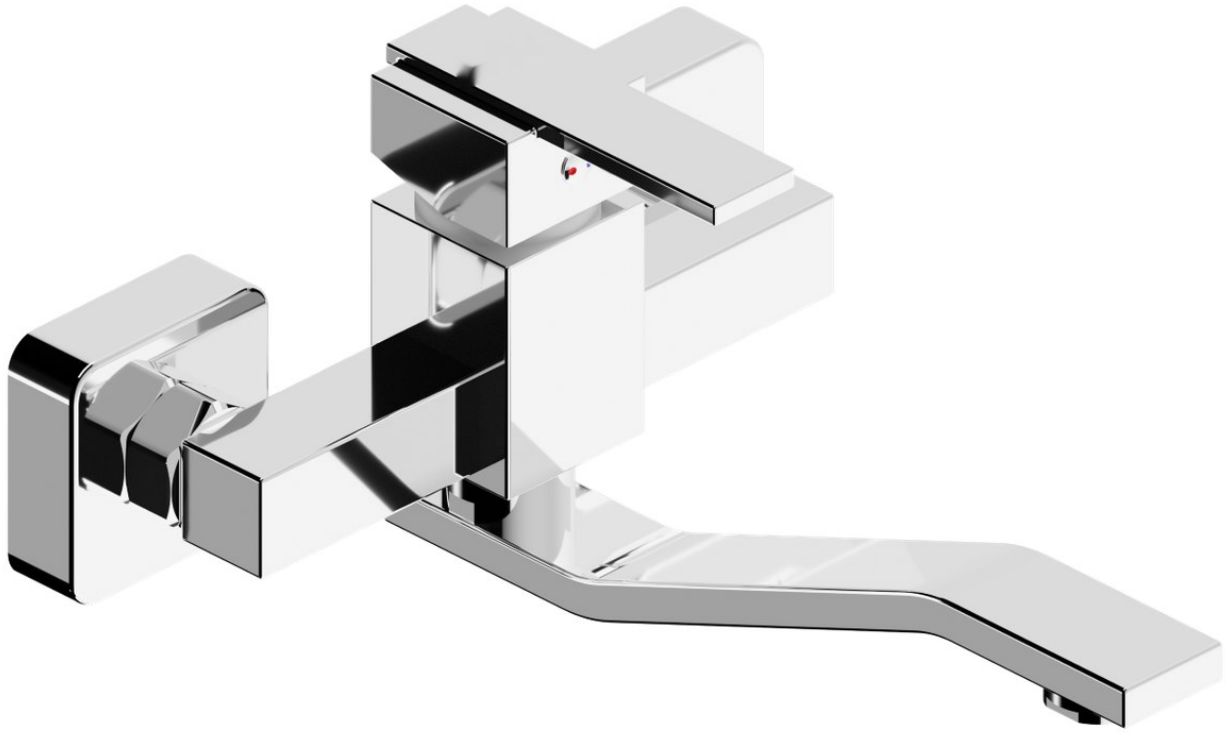

Chrome

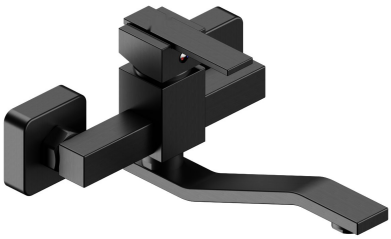

Anthracite



Black

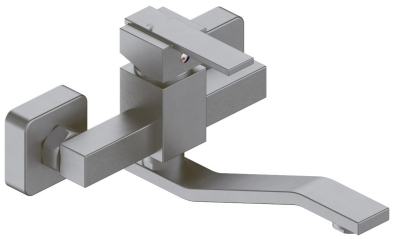

Satin

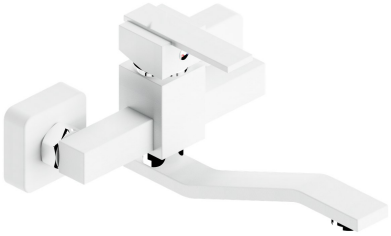

White

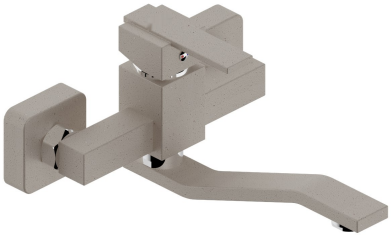

Beige granite

Confirm finish, quantity and destination with your quotation.

M1208 - MIX KUVARS DUŞ BATARYASI

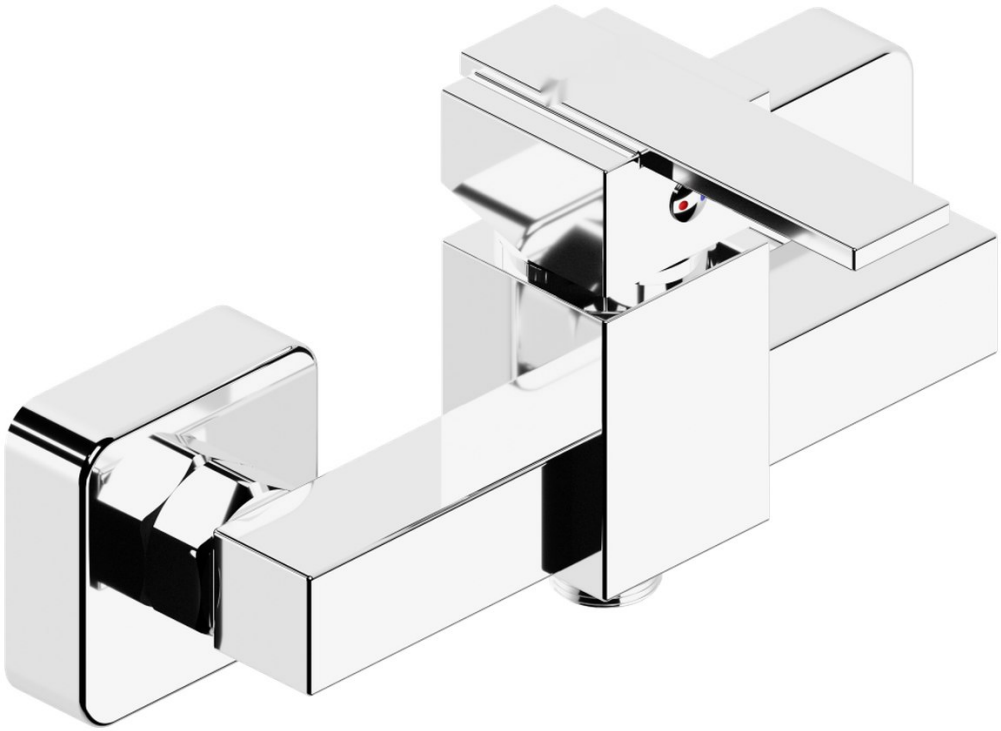

Chrome

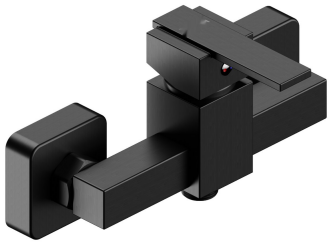

Anthracite

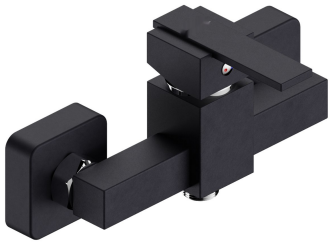

Black

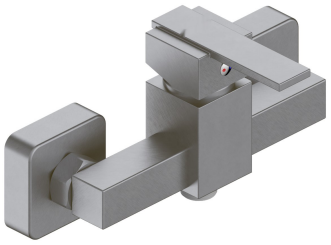

Satin



White

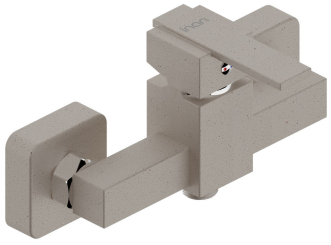

Beige granite

Confirm finish, quantity and destination with your quotation.

M1215 - MIX KUVARS BİDE BATARYASI

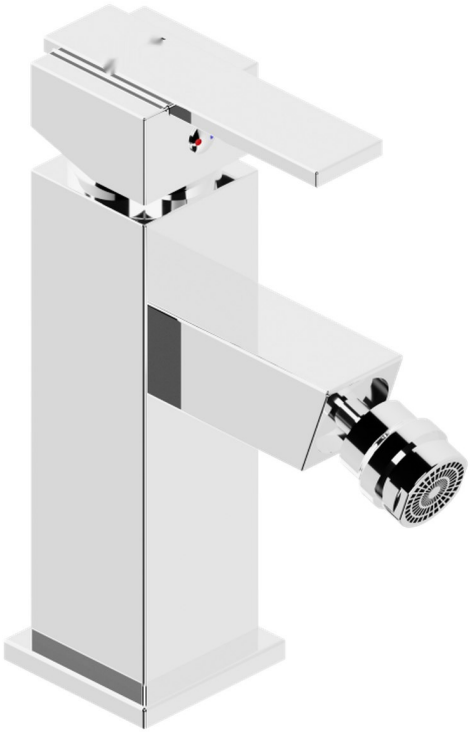

Chrome

Confirm finish, quantity and destination with your quotation.

M1216 - MIX KUVARS ÇANAK LAVABO BATARYASI



Chrome



Anthracite



Black



Beige granite



Satin



White

Confirm finish, quantity and destination with your quotation.

M1217 - MIX KUVARS HELEZONLU EVYE BATARYASI



Chrome



Anthracite



Black



Satin



White



Beige granite

Confirm finish, quantity and destination with your quotation.

M1219 - MIX KUVARS ŞATAF BATARYASI

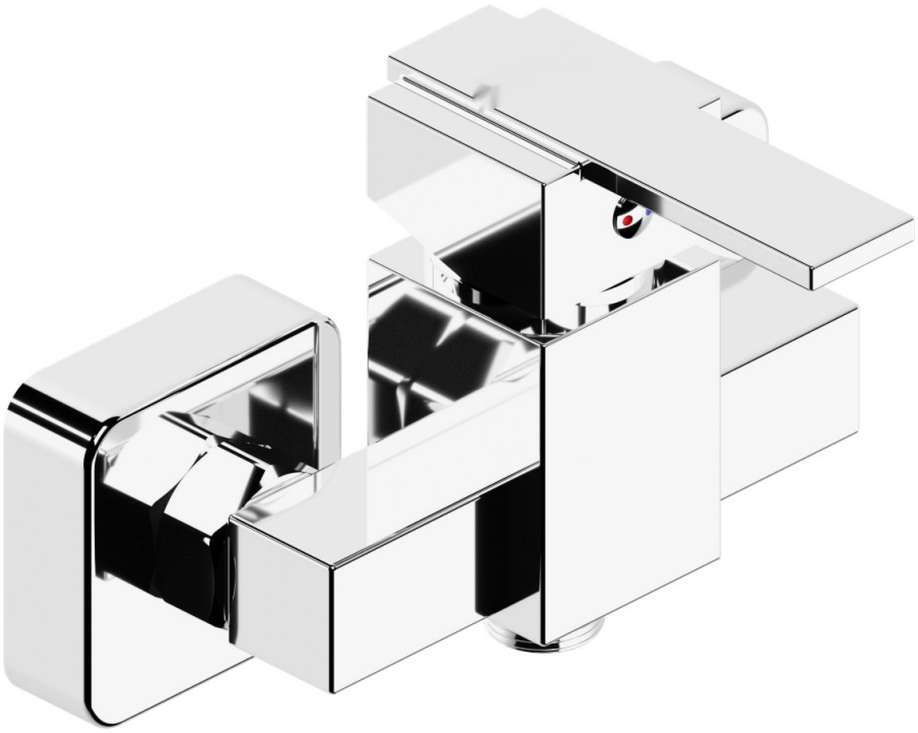

Chrome

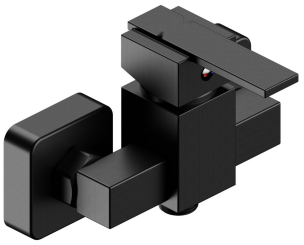

Anthracite



Black

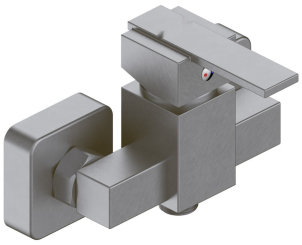

Satin



White

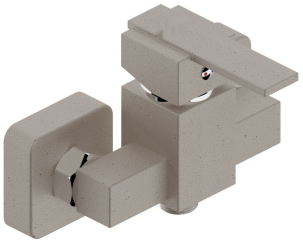

Beige granite

Confirm finish, quantity and destination with your quotation.

M2001 - MIX UZAY BANYO BATARYASI



Chrome



Black



Satin



White



Anthracite

Confirm finish, quantity and destination with your quotation.

M2002 - MIX UZAY LAVABO BATARYASI



Chrome



Black



Satin



White

Confirm finish, quantity and destination with your quotation.

M2003 - MIX UZAY KUĞU LAVABO BATARYASI



Chrome



Black



Satin



White

Confirm finish, quantity and destination with your quotation.

M2004 - MIX UZAY KUĞU EVYE BATARYASI



Chrome



Black



Satin



White

Confirm finish, quantity and destination with your quotation.

M2005 - MIX UZAY DÖNER LAVABO BATARYASI



Chrome



Black



Satin



White

Confirm finish, quantity and destination with your quotation.

M2007 - MIX UZAY APLİKE EVYE BATARYASI



Chrome



Black



Satin



White

Confirm finish, quantity and destination with your quotation.

M2008 - MIX UZAY DUŞ BATARYASI



Chrome



Black



Satin



White

Confirm finish, quantity and destination with your quotation.

M1301 - MIX TURKUAZ BANYO BATARYASI



Chrome

Confirm finish, quantity and destination with your quotation.

M1302 - MIX TURKUAZ LAVABO BATARYASI



Chrome

Confirm finish, quantity and destination with your quotation.

M1303 - MIX TURKUAZ KUĞU LAVABO BATARYASI



Chrome

Confirm finish, quantity and destination with your quotation.

M1304 - MIX TURKUAZ KUĞU EVYE BATARYASI



Chrome

Confirm finish, quantity and destination with your quotation.

M1307 - MIX TURKUAZ APLİKE EVYE BATARYASI



Chrome

Confirm finish, quantity and destination with your quotation.

M1308 - MIX TURKUAZ DUŞ BATARYASI



Chrome

Confirm finish, quantity and destination with your quotation.

M1312 - MIX TURKUAZ YÜKSEK LAVABO BATARYASI



Chrome

Confirm finish, quantity and destination with your quotation.

M1314 - MIX TURKUAZ DUVARDAN EVYE BATARYASI



Chrome

Confirm finish, quantity and destination with your quotation.

M2601 - MIX FLORİT BANYO BATARYASI

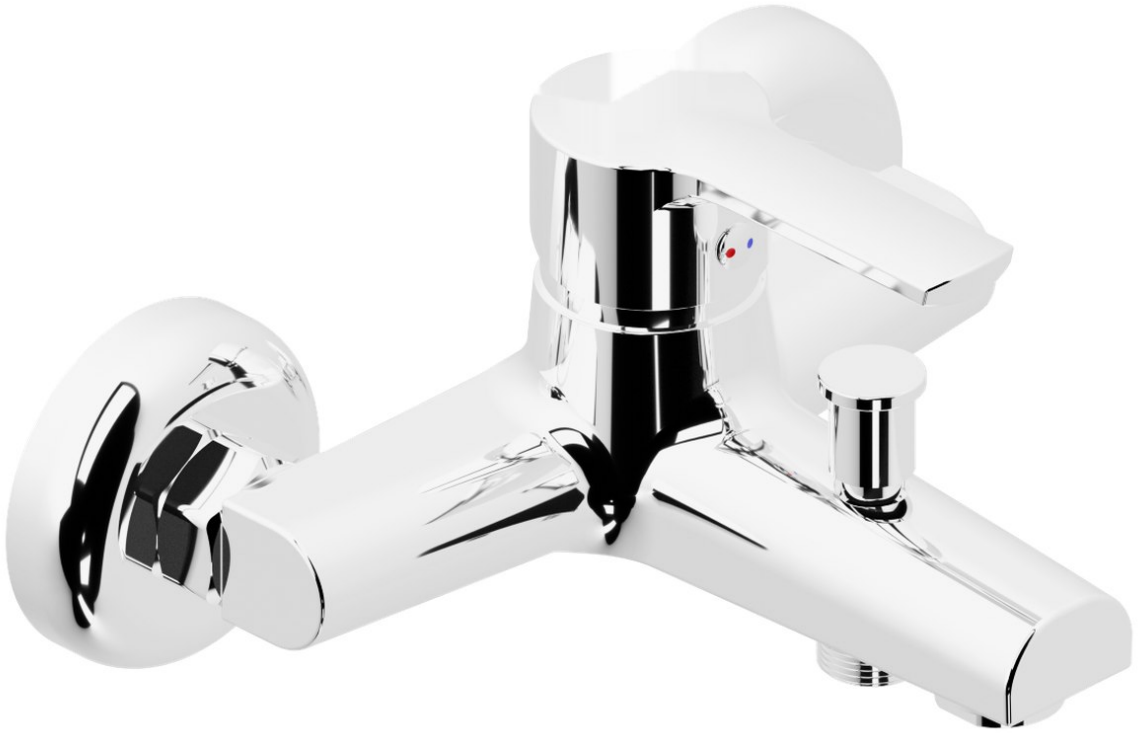

Chrome



Black

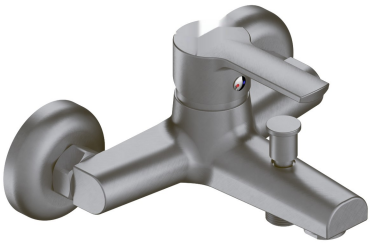

Satin



White

Confirm finish, quantity and destination with your quotation.

M2602 - MIX FLORİT LAVABO BATARYASI



Chrome



Black



Satin



White

Confirm finish, quantity and destination with your quotation.

M2603 - MIX FLORİT KUĞU LAVABO BATARYASI



Chrome



Black



Satin



White

Confirm finish, quantity and destination with your quotation.

M2604 - MIX FLORİT KUĞU EVYE BATARYASI



Chrome



Black



Satin



White

Confirm finish, quantity and destination with your quotation.

M2607 - MIX FLORİT APLİKE EVYE BATARYASI



Chrome



Black



Satin



White

Confirm finish, quantity and destination with your quotation.

M2608 - MIX FLORİT DUŞ BATARYASI



Chrome



Black

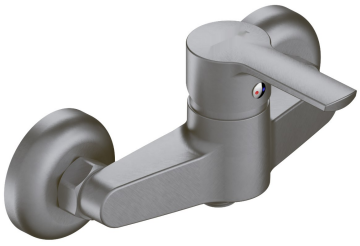

Satin



White

Confirm finish, quantity and destination with your quotation.

M2201 - MIX AY BANYO BATARYASI



Chrome

Confirm finish, quantity and destination with your quotation.

M2203 - MIX AY KUĞU LAVABO BATARYASI



Chrome

Confirm finish, quantity and destination with your quotation.

M2204 - MIX AY KUĞU EVYE BATARYASI



Chrome

Confirm finish, quantity and destination with your quotation.

M2207 - MIX AY APLİKE EVYE BATARYASI



Chrome

Confirm finish, quantity and destination with your quotation.

M2208 - MIX AY DUŞ BATARYASI



Chrome

Confirm finish, quantity and destination with your quotation.

M2212 - MIX AY YÜKSEK LAVABO BATARYASI



Chrome

Confirm finish, quantity and destination with your quotation.

M2214 - MIX AY DUVARDAN EVYE BATARYASI



Chrome

Confirm finish, quantity and destination with your quotation.

M2101 - MIX FEZA BANYO BATARYASI

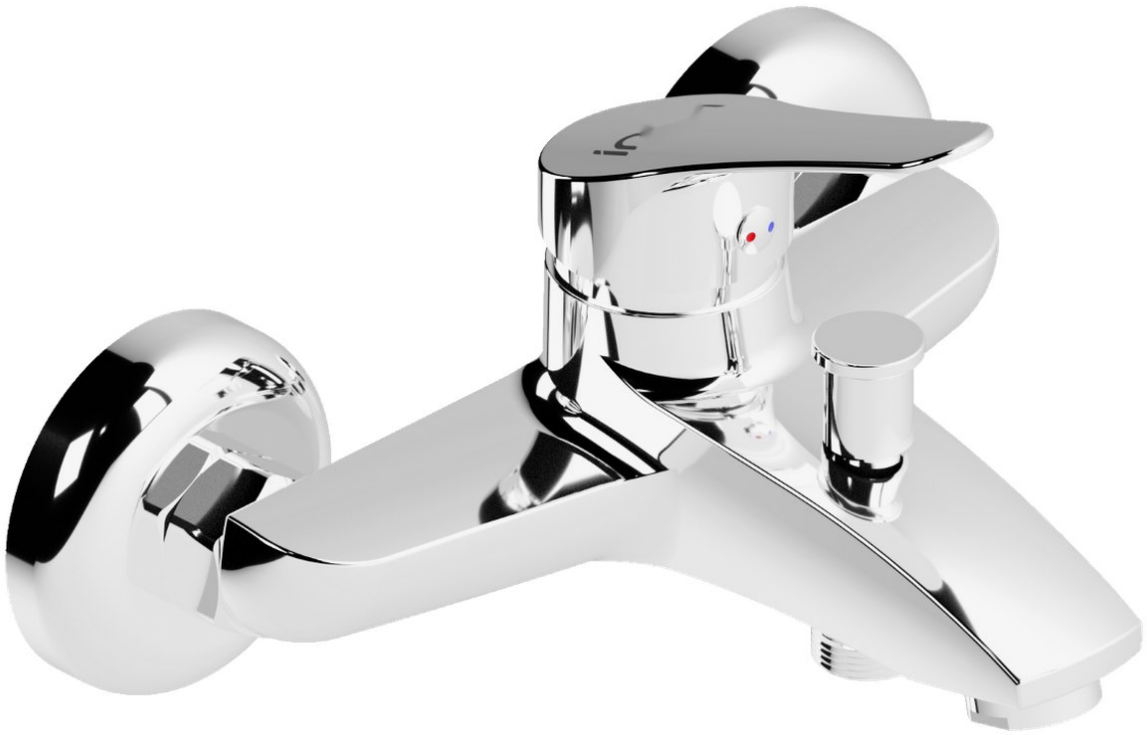

Chrome

Confirm finish, quantity and destination with your quotation.

M2102 - MIX FEZA LAVABO BATARYASI



Chrome

Confirm finish, quantity and destination with your quotation.

M2103 - MIX FEZA KUĞU LAVABO BATARYASI



Chrome

Confirm finish, quantity and destination with your quotation.

M2104 - MIX FEZA KUĞU EVYE BATARYASI



Chrome

Confirm finish, quantity and destination with your quotation.

M2107 - MIX FEZA APLİKE EVYE BATARYASI



Chrome

Confirm finish, quantity and destination with your quotation.

M2108 - MIX FEZA DUŞ BATARYASI



Chrome

Confirm finish, quantity and destination with your quotation.

M1101 - MIX YAKUT BANYO BATARYASI



Chrome



Beige granite

Confirm finish, quantity and destination with your quotation.

M1103 - MIX YAKUT KUĞU LAVABO BATARYASI



Chrome

Confirm finish, quantity and destination with your quotation.

M1104 - MIX YAKUT KUĞU EVYE BATARYASI



Chrome

Confirm finish, quantity and destination with your quotation.

M1107 - MIX YAKUT APLİKE EVYE BATARYASI



Chrome

Confirm finish, quantity and destination with your quotation.

M1108 - MIX YAKUT DUŞ BATARYASI



Chrome

Confirm finish, quantity and destination with your quotation.

M1112 - MIX YAKUT YÜKSEK LAVABO BATARYASI



Chrome

Confirm finish, quantity and destination with your quotation.

M1115 - MIX YAKUT BİDE BATARYASI



Chrome

Confirm finish, quantity and destination with your quotation.

M1116 - MIX YAKUT ÇANAK LAVABO BATARYASI



Chrome

Confirm finish, quantity and destination with your quotation.

M1801 - MIX OLTU BANYO BATARYASI



Chrome

Confirm finish, quantity and destination with your quotation.

M1802 - MIX OLTU LAVABO BATARYASI



Chrome

Confirm finish, quantity and destination with your quotation.

M1803 - MIX OLTU KUĞU LAVABO BATARYASI



Chrome

Confirm finish, quantity and destination with your quotation.

M1804 - MIX OLTU KUĞU EVYE BATARYASI



Chrome

Confirm finish, quantity and destination with your quotation.

M1805 - MIX OLTU DÖNER LAVABO BATARYASI



Chrome

Confirm finish, quantity and destination with your quotation.

M1806 - MIX OLTU DÖNER EVYE BATARYASI



Chrome

Confirm finish, quantity and destination with your quotation.

M1807 - MIX OLTU APLİKE EVYE BATARYASI



Chrome

Confirm finish, quantity and destination with your quotation.

M1808 - MIX OLTU DUŞ BATARYASI

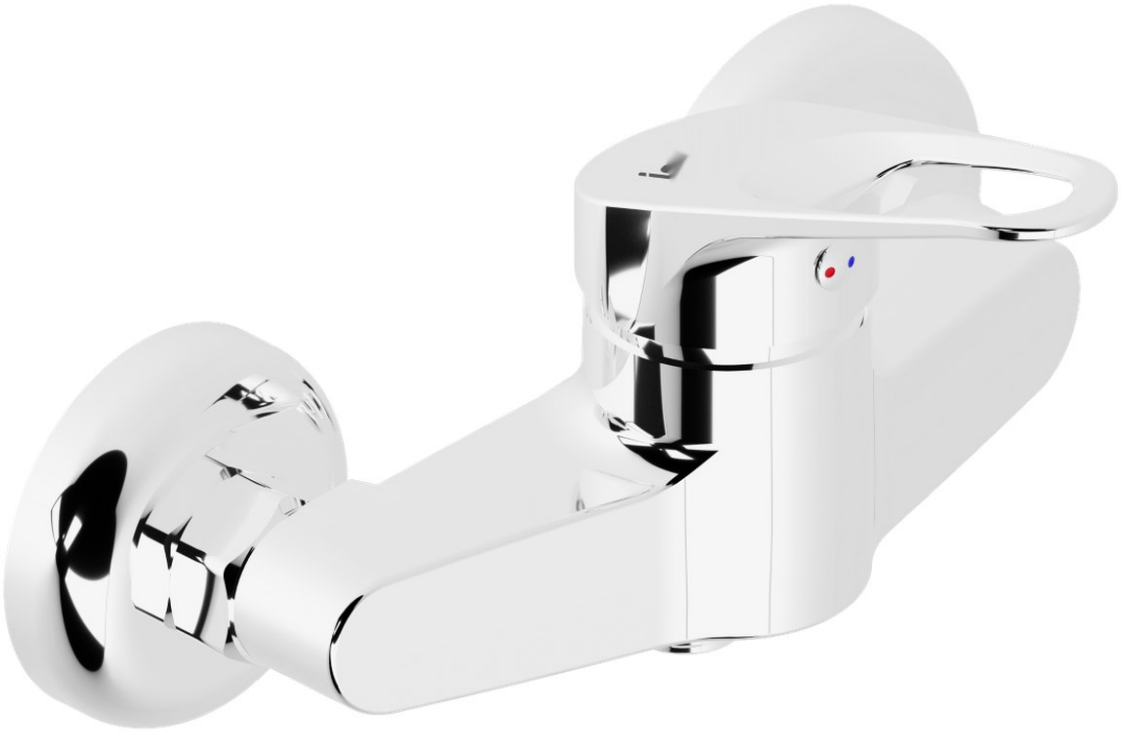

Chrome

Confirm finish, quantity and destination with your quotation.

M1812 - MIX OLTU YÜKSEK LAVABO BATARYASI



Chrome

Confirm finish, quantity and destination with your quotation.

M1814 - MIX OLTU DUVARDAN EVYE BATARYASI



Chrome

Confirm finish, quantity and destination with your quotation.

M1818 - MIX OLTU BERBER BATARYASI



Chrome

Confirm finish, quantity and destination with your quotation.

M1901 - MIX AMBER BANYO BATARYASI

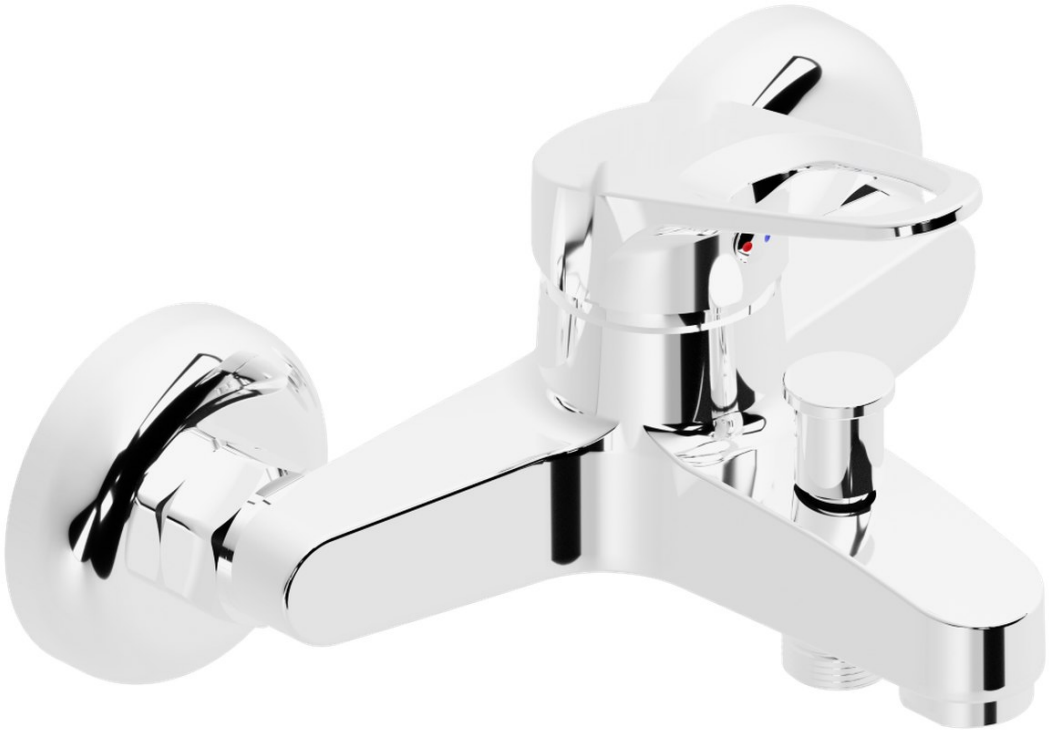

Chrome

Confirm finish, quantity and destination with your quotation.

M1902 - MIX AMBER LAVABO BATARYASI



Chrome

Confirm finish, quantity and destination with your quotation.

M1903 - MIX AMBER KUĞU LAVABO BATARYASI



Chrome

Confirm finish, quantity and destination with your quotation.

M1904 - MIX AMBER KUĞU EVYEBATARYASI



Chrome

Confirm finish, quantity and destination with your quotation.

M1905 - MIX AMBER DÖNER LAVABO BATARYASI



Chrome

Confirm finish, quantity and destination with your quotation.

M1906 - MIX AMBER DÖNER EVYE BATARYASI



Chrome

Confirm finish, quantity and destination with your quotation.

M1907 - MIX AMBER APLİKE EVYE BATARYASI



Chrome

Confirm finish, quantity and destination with your quotation.

M1908 - MIX AMBER DUŞ BATARYASI

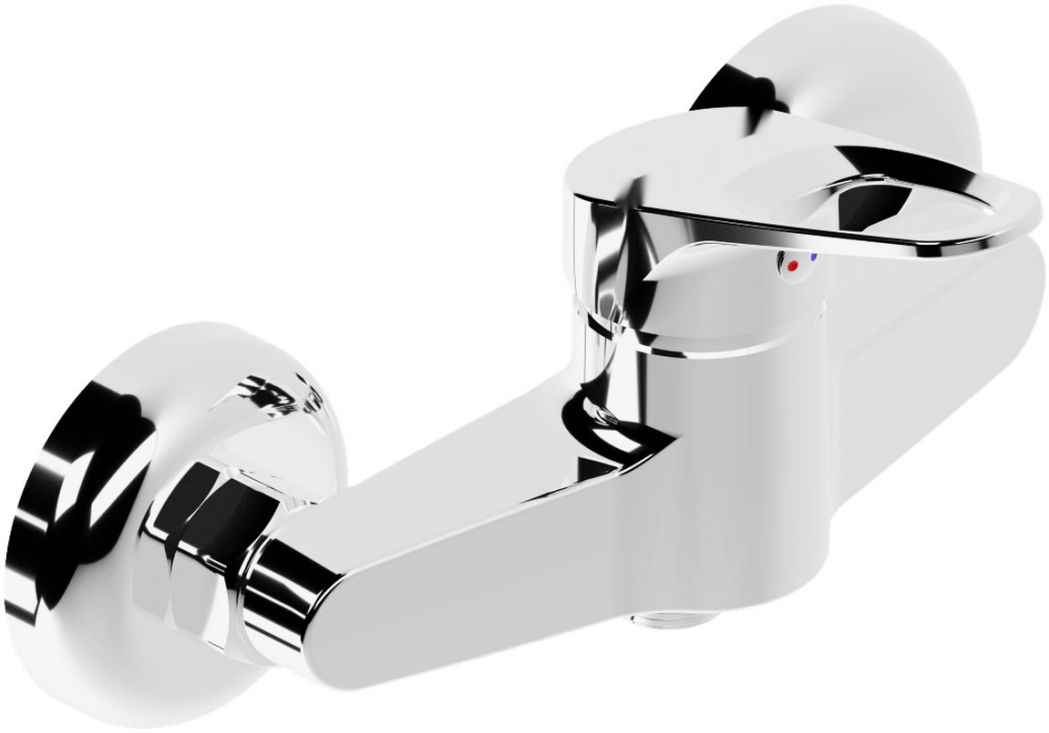

Chrome

Confirm finish, quantity and destination with your quotation.

M1912 - MIX AMBER YÜKSEK LAVABO BATARYASI



Chrome

Confirm finish, quantity and destination with your quotation.

M1919 - MIX AMBER ŞATAF BATARYASI



Chrome

Confirm finish, quantity and destination with your quotation.

M1001 - MIX YEŞİM BANYO BATARYASI



Chrome

Confirm finish, quantity and destination with your quotation.

M1002 - MIX YEŞİM LAVABO BATARYASI



Chrome

Confirm finish, quantity and destination with your quotation.

M1003 - MIX YEŞİM KUĞU LAVABO BATARYASI



Chrome

Confirm finish, quantity and destination with your quotation.

M1004 - MIX YEŞİM KUĞU EVYEBATARYASI



Chrome

Confirm finish, quantity and destination with your quotation.

M1007 - MIX YEŞİM APLİKE EVYE BATARYASI



Chrome

Confirm finish, quantity and destination with your quotation.

M1008 - MIX YEŞİM DUŞ BATARYASI

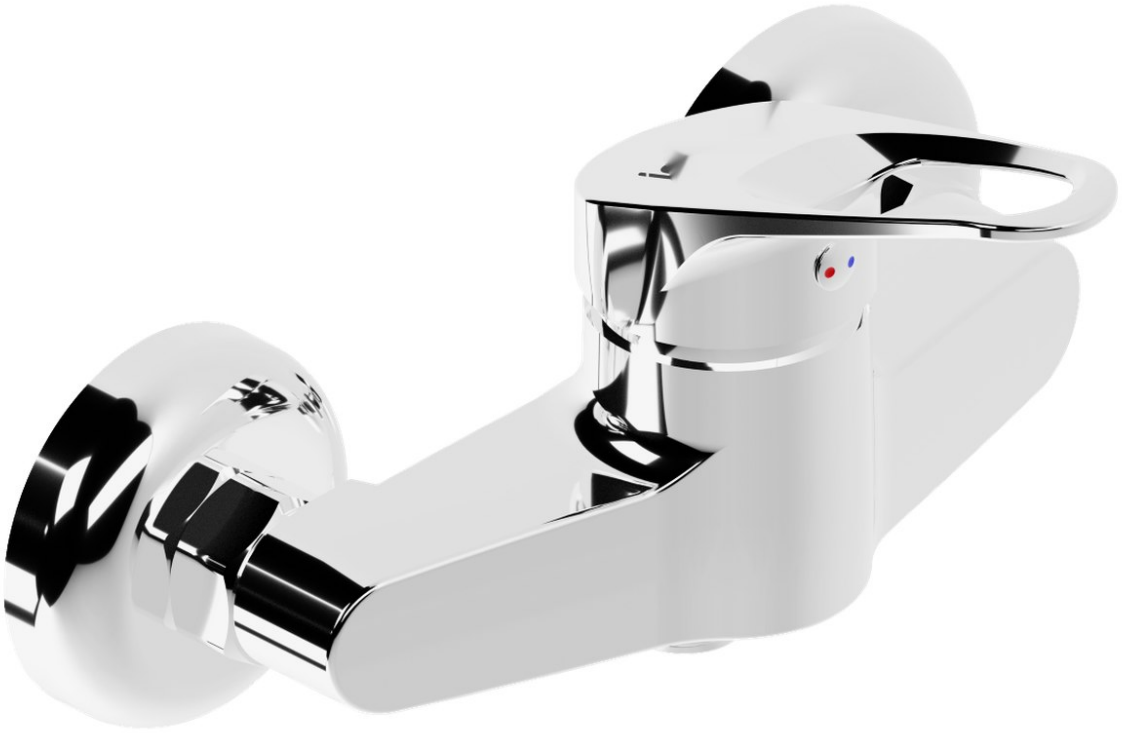

Chrome

Confirm finish, quantity and destination with your quotation.

M1601 - MIX İNCİ BANYO BATARYASI



Chrome

Confirm finish, quantity and destination with your quotation.

M1602 - MIX İNCİ LAVABO BATARYASI



Chrome

Confirm finish, quantity and destination with your quotation.

M1603 - MIX İNCİ KUĞU LAVABO BATARYASI



Chrome

Confirm finish, quantity and destination with your quotation.

M1604 - MIX İNCİ KUĞU EVYE BATARYASI



Chrome

Confirm finish, quantity and destination with your quotation.

M1607 - MIX İNCİ APLİKE EVYE BATARYASI



Chrome

Confirm finish, quantity and destination with your quotation.

M1608 - MIX İNCİ DUŞ BATARYASI

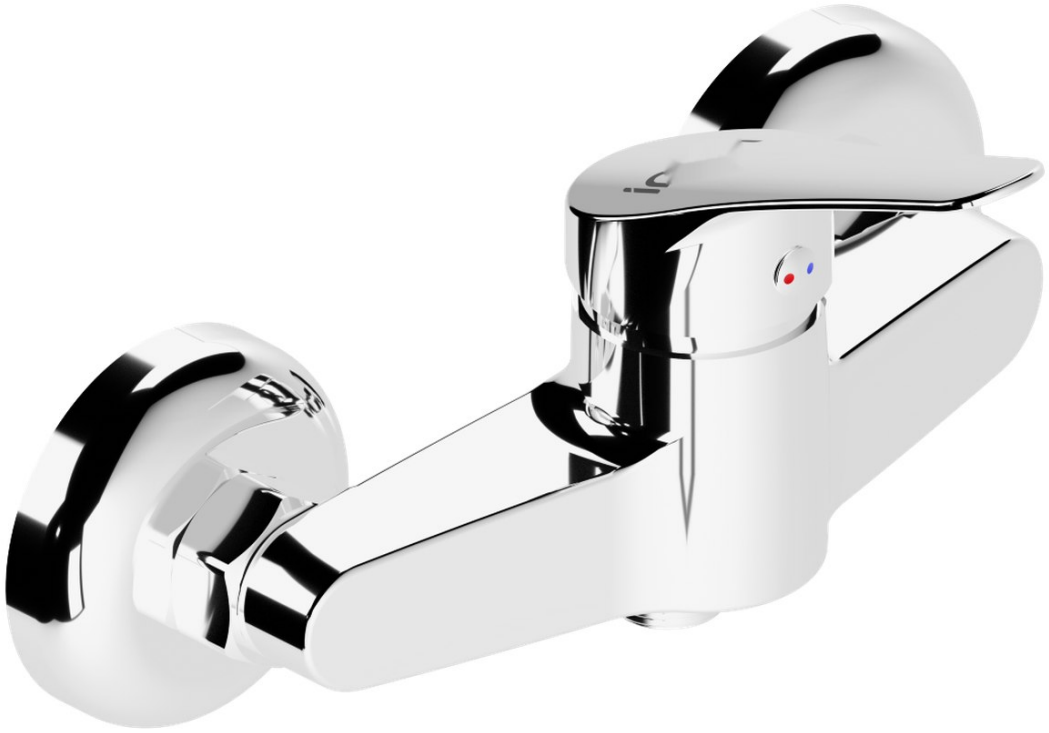

Chrome

Confirm finish, quantity and destination with your quotation.

M1612 - MIX İNCİYÜKSEK LAVABO BATARYASI



Chrome

Confirm finish, quantity and destination with your quotation.

M1619 - MIX İNCİ ŞATAF BATARYASI



Chrome

Confirm finish, quantity and destination with your quotation.

M0901 - MIX SAFİR BANYO BATARYASI



Chrome

Confirm finish, quantity and destination with your quotation.

M0902 - MIX SAFİR LAVABO BATARYASI



Chrome

Confirm finish, quantity and destination with your quotation.

M0903 - MIX SAFİR KUĞU LAVABO BATARYASI



Chrome

Confirm finish, quantity and destination with your quotation.

M0904 - MIX SAFİR KUĞU EVYE BATARYASI



Chrome

Confirm finish, quantity and destination with your quotation.

M0907 - MIX SAFİR APLİKE EVYE BATARYASI



Chrome

Confirm finish, quantity and destination with your quotation.

M0908 - MIX SAFİR DUŞ BATARYASI



Chrome

Confirm finish, quantity and destination with your quotation.

M0912 - MIX SAFİR YÜKSEK LAVABO BATARYASI



Chrome

Confirm finish, quantity and destination with your quotation.

M0919 - MIX SAFİR ŞATAF BATARYASI



Chrome

Confirm finish, quantity and destination with your quotation.

M1701 - MIX MERCAN BANYO BATARYASI



Chrome

Confirm finish, quantity and destination with your quotation.

M1702 - MIX MERCAN LAVABO BATARYASI



Chrome

Confirm finish, quantity and destination with your quotation.

M1703 - MIX MERCAN KUĞU LAVABO BATARYASI



Chrome

Confirm finish, quantity and destination with your quotation.

M1704 - MIX MERCAN KUĞU EVYE BATARYASI



Chrome

Confirm finish, quantity and destination with your quotation.

M1707 - MIX MERCAN APLİKE EVYE BATARYASI



Chrome

Confirm finish, quantity and destination with your quotation.

M1708 - MIX MERCAN DUŞ BATARYASI



Chrome

Confirm finish, quantity and destination with your quotation.

M1719 - MIX MERCAN ŞATAF BATARYASI



Chrome

Confirm finish, quantity and destination with your quotation.

M2805.101 - MIX SPİNEL DÖNER LAVABO BATARYASI 1



Chrome

Confirm finish, quantity and destination with your quotation.

M2805.102 - MIX SPİNEL DÖNER LAVABO BATARYASI 2



Chrome

Confirm finish, quantity and destination with your quotation.

M2805.103 - MIX SPİNEL DÖNER LAVABO BATARYASI 3



Chrome

Confirm finish, quantity and destination with your quotation.

M2805.211 - MIX SPİNEL DÖNER LAVABO BATARYASI 4



Chrome

Confirm finish, quantity and destination with your quotation.

M2805.212 - MIX SPİNEL DÖNER LAVABO BATARYASI 5



Chrome

Confirm finish, quantity and destination with your quotation.

M2805.213 - MIX SPİNEL DÖNER LAVABO BATARYASI 6



Chrome

Confirm finish, quantity and destination with your quotation.

M2702 - MIX MONO LAVABO BATARYASI



Chrome

Confirm finish, quantity and destination with your quotation.

M2704 - MIX MONO KUĞU EVYE BATARYASI



Chrome

Confirm finish, quantity and destination with your quotation.

M2709 - MIX MONO UZUN MUSLUK



Chrome

Confirm finish, quantity and destination with your quotation.

M2710 - MIX MONO MERMERÜSTÜ EVYE BATARYASI 1



Chrome

Confirm finish, quantity and destination with your quotation.

M2710.10 - MIX MONO MERMERÜSTÜ EVYE BATARYASI 2



Chrome

Confirm finish, quantity and destination with your quotation.

M2711 - MIX MONO MERMERÜSTÜ LAVABO BATARYASI



Chrome

Confirm finish, quantity and destination with your quotation.

M2714 - MIX MONO DUVARDAN EVYE BATARYASI



Chrome

Confirm finish, quantity and destination with your quotation.

M3017 - MIX LAPİS HELEZONLU EVYE BATARYASI



Chrome

Confirm finish, quantity and destination with your quotation.

M3120 - MIX TOPAZ ESNEK BORULU EVYE BATARYASI



Chrome

Confirm finish, quantity and destination with your quotation.

M3221 - MIX OPAL ARTMALI EVYE BATARYASI



Chrome

Confirm finish, quantity and destination with your quotation.

M3401 - MIX SELENİT BANYO BATARYASI

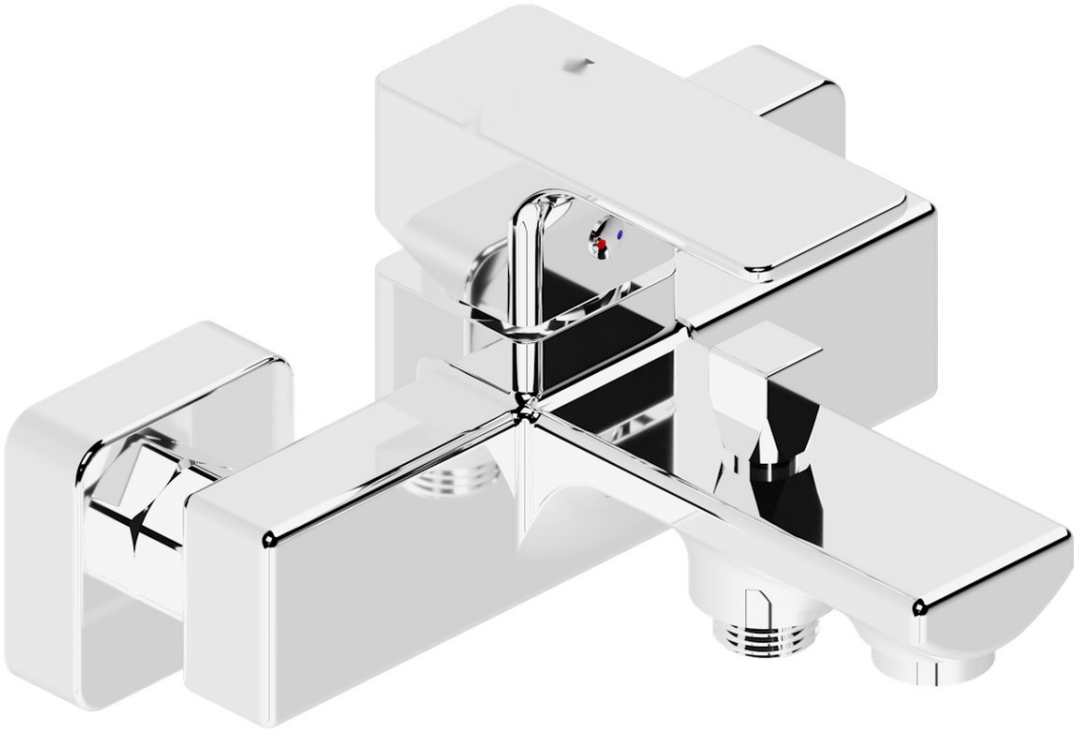

Chrome

Confirm finish, quantity and destination with your quotation.

M3402 - MIX SELENİT LAVABO BATARYASI



Chrome

Confirm finish, quantity and destination with your quotation.

M3404 - MIX SELENİT KUĞU EVYE BATARYASI



Chrome

Confirm finish, quantity and destination with your quotation.

M3301 - MIX ATLANTİS BANYO BATARYASI

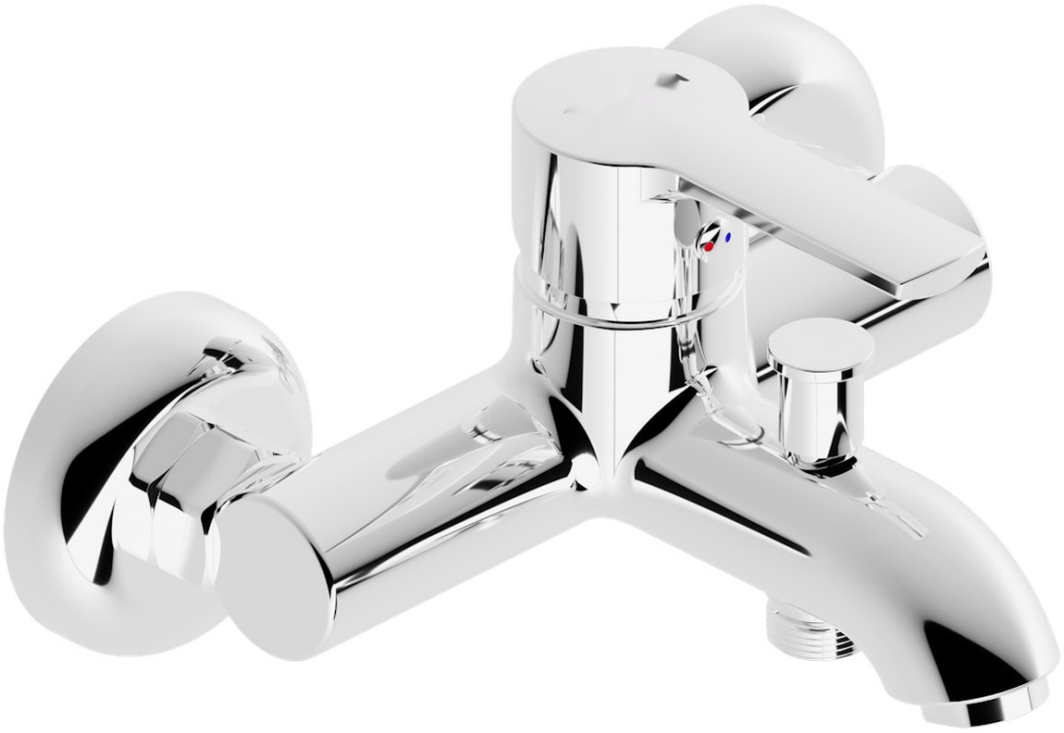

Chrome

Confirm finish, quantity and destination with your quotation.

M3303 - MIX ATLANTİS KUĞU LAVABO BATARYASI



Chrome

Confirm finish, quantity and destination with your quotation.

M3304 - MIX ATLANTİS KUĞU EVYE BATARYASI



Chrome

Confirm finish, quantity and destination with your quotation.

M3312 - MIX ATLANTİS YÜKSEK LAVABO BATARYASI



Chrome

Confirm finish, quantity and destination with your quotation.

M3316 - MIX ATLANTİS ÇANAK LAVABO BATARYASI



Chrome

Confirm finish, quantity and destination with your quotation.

CARBOGA

shaping future

Request a quotation

Send model codes, finish, quantity and destination country.

info@carboga.com

+90 532 160 29 56

https://carboga.com

Giyimkent Business Center, 16th Street No: 37/B

Esenler, Istanbul, Türkiye