CARBOGA

shaping future

Valves, extensions & hoses

62 models · 2026



Water fixtures · Mixers · Accessories

carboga.com | info@carboga.com

CARBOGA

Model index

A0263 - ARA MUSLUK GÜMÜŞ - OMEGA 1/2" - 1/2" 4
A0264 - ARA MUSLUK GÜMÜŞ - OMEGA 1/2" - 1/2" AÇ KAPAT 5
A0355 - ARA MUSLUK TUNÇ - TETA 1/2" - 1/2" 6
A0356 - ARA MUSLUK TUNÇ - TETA 1/2" - 1/2" AÇ KAPAT 7
A0563 - ARA MUSLUK BEREN - OMEGA 1/2" - 1/2" 8
A0564 - ARA MUSLUK BEREN - OMEGA 1/2" - 1/2" AÇ KAPAT 9
A0663 - ARA MUSLUK YONCA - OMEGA 1/2" - 1/2" 10
A0664 - ARA MUSLUK YONCA - OMEGA 1/2" - 1/2" AÇ KAPAT 11
A5462 - ARA MUSLUK GEO FİLİTRELİ 1/2" 12
A5559 - ARA MUSLUK TRİ - GAMA 1/2" - M12 13
U2510 - UZATMA 25 ÇAP 1 CM. 14
U2515 - UZATMA 25 ÇAP 1,5 CM. 15
U2520 - UZATMA 25 ÇAP 2 CM. 16
U2525 - UZATMA 25 ÇAP 2,5 CM. 17
U2530 - UZATMA 25 ÇAP 3 CM. 18
U2540 - UZATMA 25 ÇAP 4 CM. 19
U2550 - UZATMA 25 ÇAP 5 CM. 20
F0102 - FLEKS HORTUM 3/8"-3/8" 20CM. 21
F0103 - FLEKS HORTUM 3/8"-3/8" 30CM. 22
F0104 - FLEKS HORTUM 3/8"-3/8" 40CM. 23
F0105 - FLEKS HORTUM 3/8"-3/8" 50CM. 24
F0106 - FLEKS HORTUM 3/8"-3/8" 60CM. 25
F0107 - FLEKS HORTUM 3/8"-3/8" 70CM. 26
F0108 - FLEKS HORTUM 3/8"-3/8" 80CM. 27
F0109 - FLEKS HORTUM 3/8"-3/8" 90CM. 28
F0110 - FLEKS HORTUM 3/8"-3/8" 100CM. 29
F0202 - FLEKS HORTUM 3/8"-3/8"N 20CM. 30
F0203 - FLEKS HORTUM 3/8"-3/8"N 30CM. 31
F0204 - FLEKS HORTUM 3/8"-3/8"N 40CM. 32
F0205 - FLEKS HORTUM 3/8"-3/8"N 50CM. 33
F0206 - FLEKS HORTUM 3/8"-3/8"N 60CM. 34
F0207 - FLEKS HORTUM 3/8"-3/8"N 70CM. 35
F0208 - FLEKS HORTUM 3/8"-3/8"N 80CM. 36
F0209 - FLEKS HORTUM 3/8"-3/8"N 90CM. 37
F0210 - FLEKS HORTUM 3/8"-3/8"N 100CM. 38
F0302 - FLEKS HORTUM 3/8"-1/2" 20CM. 39
F0303 - FLEKS HORTUM 3/8"-1/2" 30CM. 40
F0304 - FLEKS HORTUM 3/8"-1/2" 40CM. 41

CARBOGA

Model index

F0305 - FLEKS HORTUM 3/8"-1/2" 50CM. 42
F0306 - FLEKS HORTUM 3/8"-1/2" 60CM. 43
F0307 - FLEKS HORTUM 3/8"-1/2" 70CM. 44
F0308 - FLEKS HORTUM 3/8"-1/2" 80CM. 45
F0309 - FLEKS HORTUM 3/8"-1/2" 90CM. 46
F0310 - FLEKS HORTUM 3/8"-1/2" 100CM. 47
F0402 - FLEKS HORTUM 1/2"-1/2" 20CM. 48
F0403 - FLEKS HORTUM 1/2"-1/2" 30CM. 49
F0404 - FLEKS HORTUM 1/2"-1/2" 40CM. 50
F0405 - FLEKS HORTUM 1/2"-1/2" 50CM. 51
F0406 - FLEKS HORTUM 1/2"-1/2" 60CM. 52
F0407 - FLEKS HORTUM 1/2"-1/2" 70CM. 53
F0408 - FLEKS HORTUM 1/2"-1/2" 80CM. 54
F0409 - FLEKS HORTUM 1/2"-1/2" 90CM. 55
F0410 - FLEKS HORTUM 1/2"-1/2" 100CM. 56
F0502 - FLEKS HORTUM 1/2"-1/2"N 20CM. 57
F0503 - FLEKS HORTUM 1/2"-1/2"N 30CM. 58
F0504 - FLEKS HORTUM 1/2"-1/2"N 40CM. 59
F0505 - FLEKS HORTUM 1/2"-1/2"N 50CM. 60
F0506 - FLEKS HORTUM 1/2"-1/2"N 60CM. 61
F0507 - FLEKS HORTUM 1/2"-1/2"N 70CM. 62
F0508 - FLEKS HORTUM 1/2"-1/2"N 80CM. 63
F0509 - FLEKS HORTUM 1/2"-1/2"N 90CM. 64
F0510 - FLEKS HORTUM 1/2"-1/2"N 100CM. 65

A0263 - ARA MUSLUK GÜMÜŞ - OMEGA 1/2" - 1/2"



Chrome

Confirm finish, quantity and destination with your quotation.

CARBOGA

Angle valves / GÜMÜŞ - OMEGA

A0264 - ARA MUSLUK GÜMÜŞ - OMEGA 1/2" - 1/2" AÇ KAPAT



Chrome

Confirm finish, quantity and destination with your quotation.

A0355 - ARA MUSLUK TUNÇ - TETA 1/2" - 1/2"



Chrome

Confirm finish, quantity and destination with your quotation.

A0356 - ARA MUSLUK TUNÇ - TETA 1/2" - 1/2" AÇ KAPAT



Chrome

Confirm finish, quantity and destination with your quotation.

A0563 - ARA MUSLUK BEREN - OMEGA 1/2" - 1/2"



Chrome

Confirm finish, quantity and destination with your quotation.

A0564 - ARA MUSLUK BEREN - OMEGA 1/2" - 1/2" AÇ KAPAT



Chrome

Confirm finish, quantity and destination with your quotation.

A0663 - ARA MUSLUK YONCA - OMEGA 1/2" - 1/2"



Chrome

Confirm finish, quantity and destination with your quotation.

A0664 - ARA MUSLUK YONCA - OMEGA 1/2" - 1/2" AÇ KAPAT



Chrome

Confirm finish, quantity and destination with your quotation.

A5462 - ARA MUSLUK GEO FİLİTRELİ 1/2"

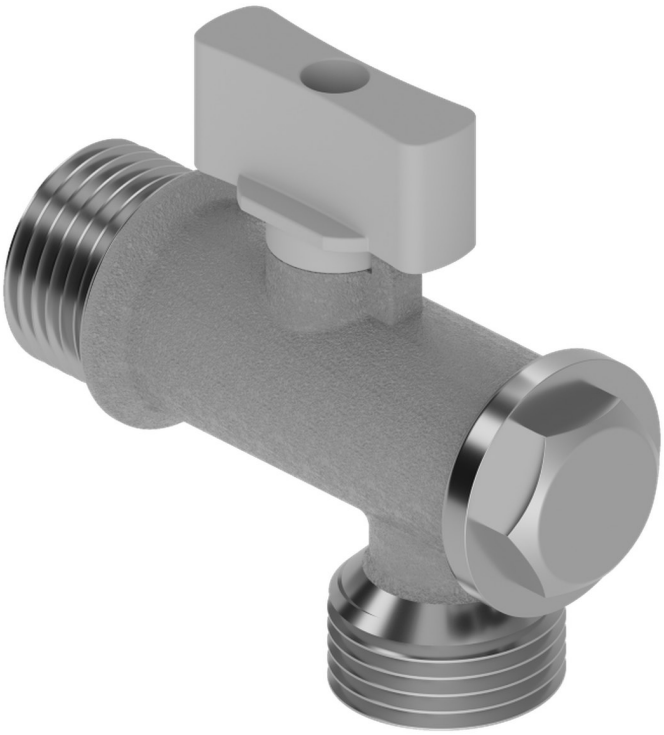

Chrome

Confirm finish, quantity and destination with your quotation.

A5559 - ARA MUSLUK TRİ - GAMA 1/2" - M12



Chrome

Confirm finish, quantity and destination with your quotation.

U2510 - UZATMA 25 ÇAP 1 CM.



Chrome

Confirm finish, quantity and destination with your quotation.

U2515 - UZATMA 25 ÇAP 1,5 CM.



Chrome

Confirm finish, quantity and destination with your quotation.

U2520 - UZATMA 25 ÇAP 2 CM.



Chrome

Confirm finish, quantity and destination with your quotation.

U2525 - UZATMA 25 ÇAP 2,5 CM.



Chrome

Confirm finish, quantity and destination with your quotation.

U2530 - UZATMA 25 ÇAP 3 CM.



Chrome

Confirm finish, quantity and destination with your quotation.

U2540 - UZATMA 25 ÇAP 4 CM.



Chrome

Confirm finish, quantity and destination with your quotation.

U2550 - UZATMA 25 ÇAP 5 CM.



Chrome

Confirm finish, quantity and destination with your quotation.

F0102 - FLEKS HORTUM 3/8"-3/8" 20CM.

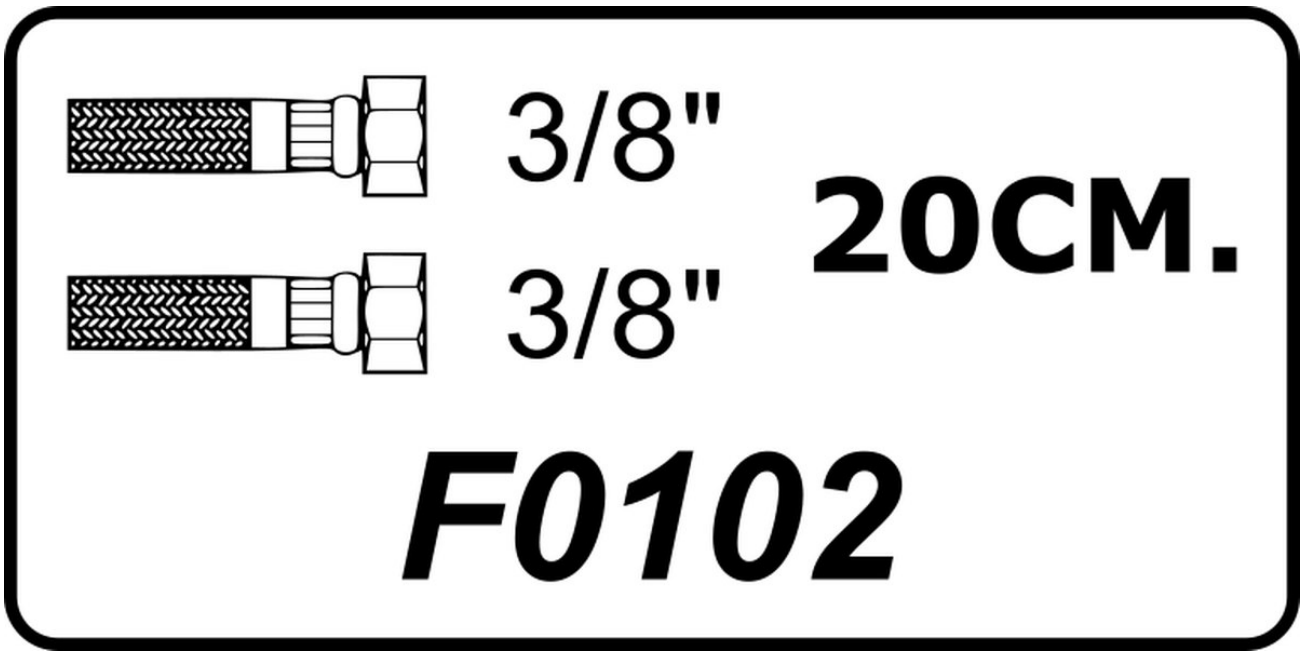

Confirm finish, quantity and destination with your quotation.

F0103 - FLEKS HORTUM 3/8"-3/8" 30CM.

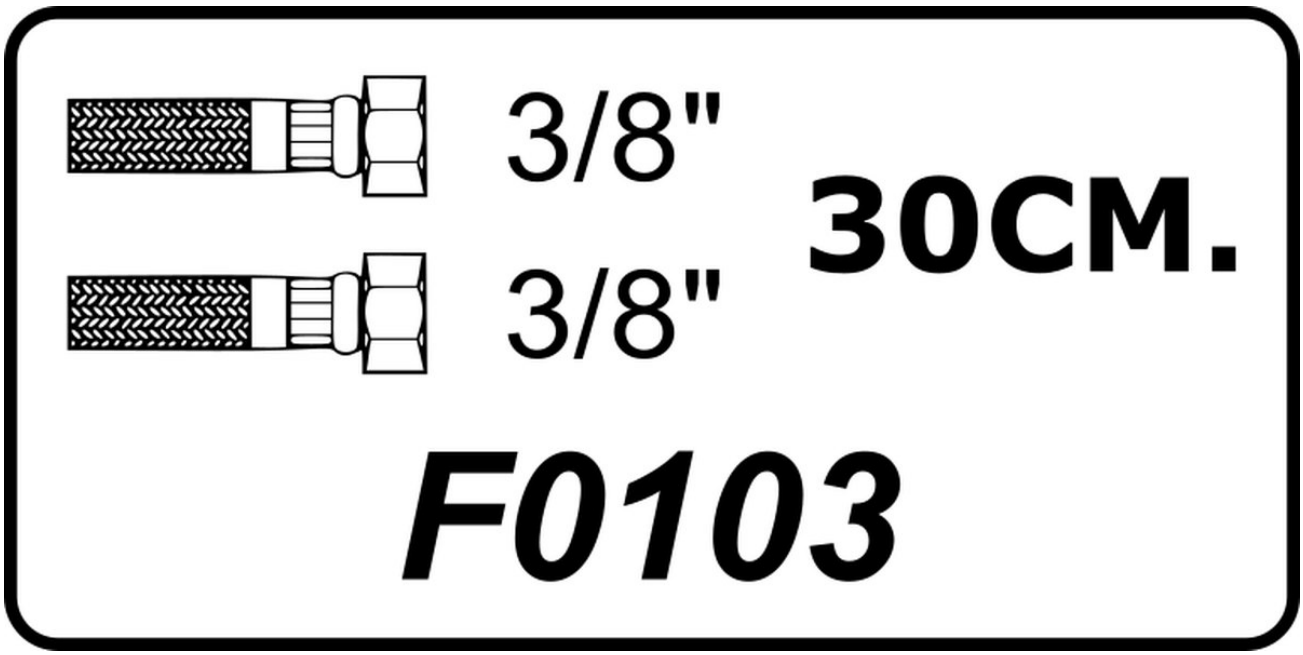

Confirm finish, quantity and destination with your quotation.

F0104 - FLEKS HORTUM 3/8"-3/8" 40CM.

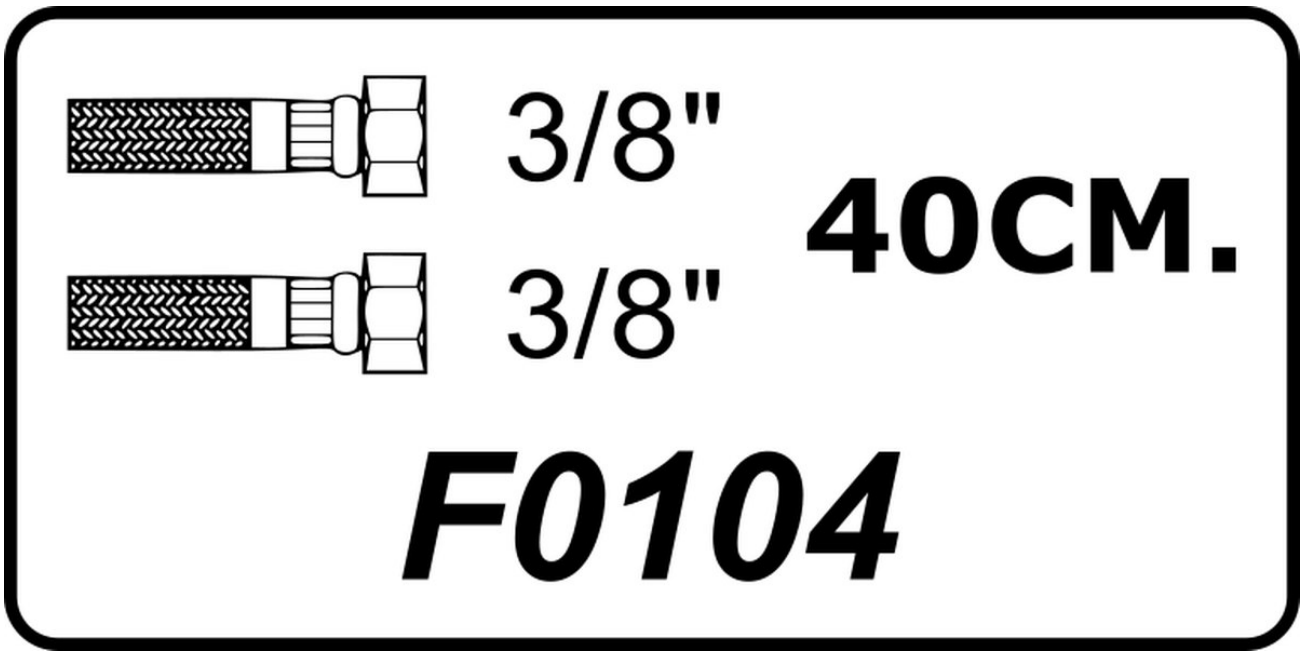

Confirm finish, quantity and destination with your quotation.

F0105 - FLEKS HORTUM 3/8"-3/8" 50CM.

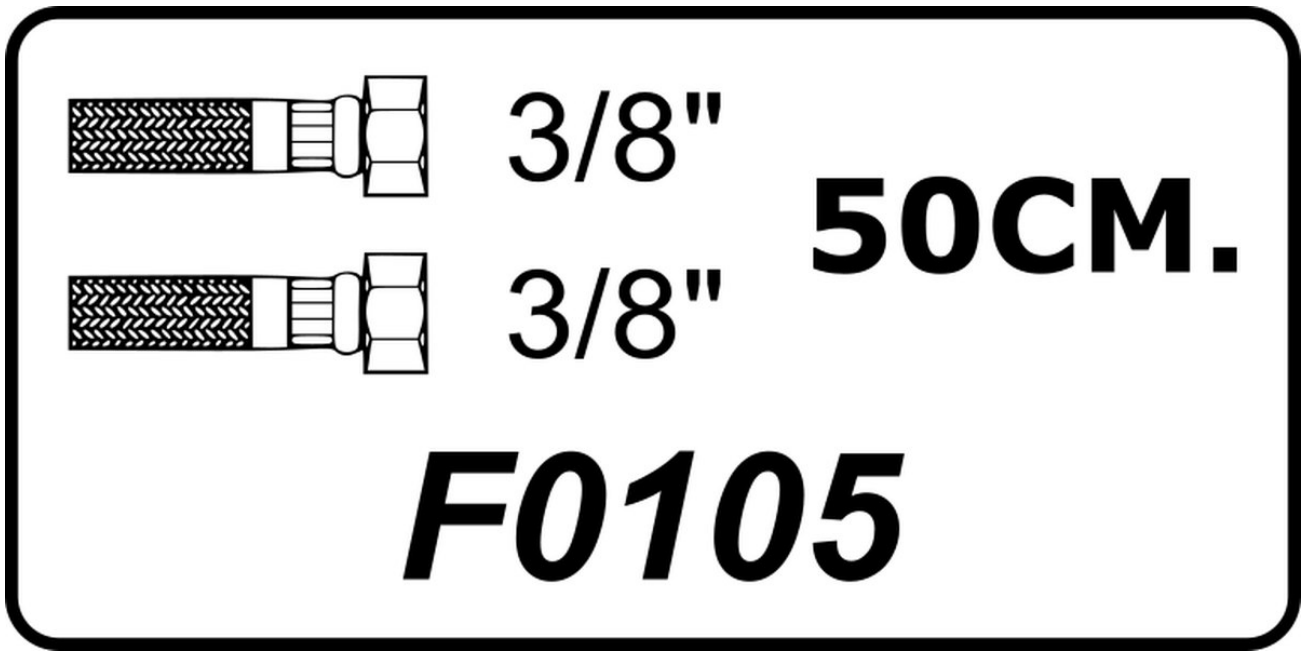

Confirm finish, quantity and destination with your quotation.

F0106 - FLEKS HORTUM 3/8"-3/8" 60CM.

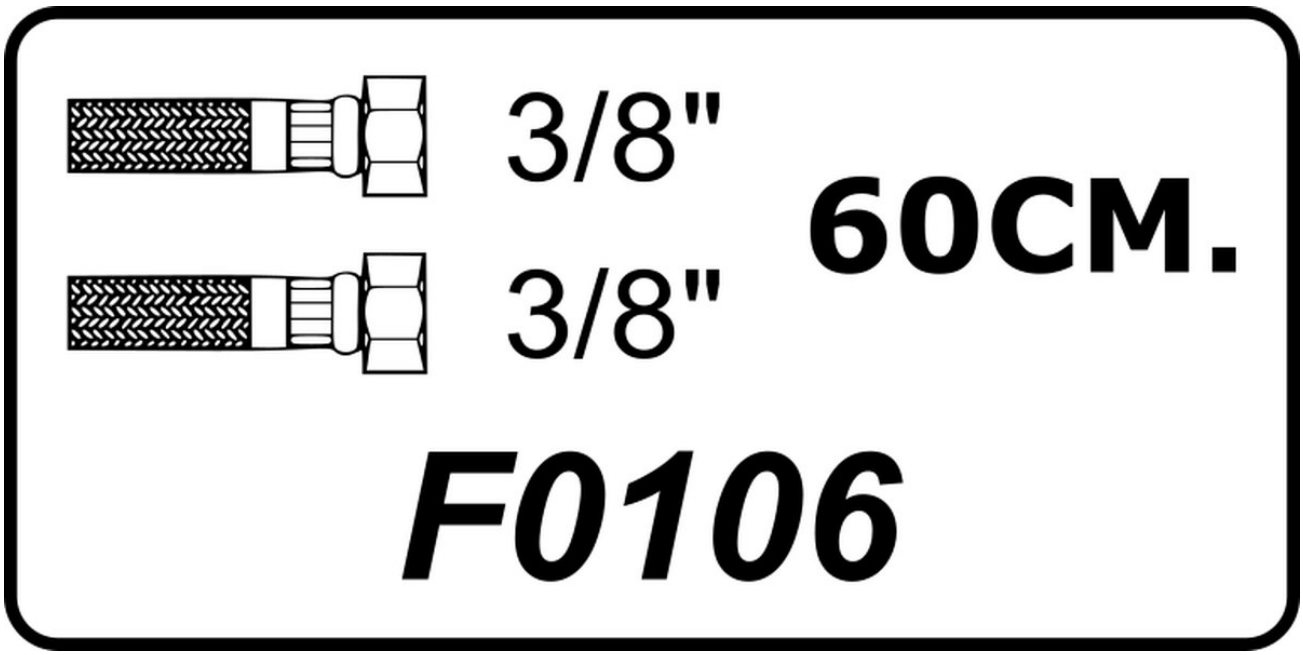

Confirm finish, quantity and destination with your quotation.

F0107 - FLEKS HORTUM 3/8"-3/8" 70CM.

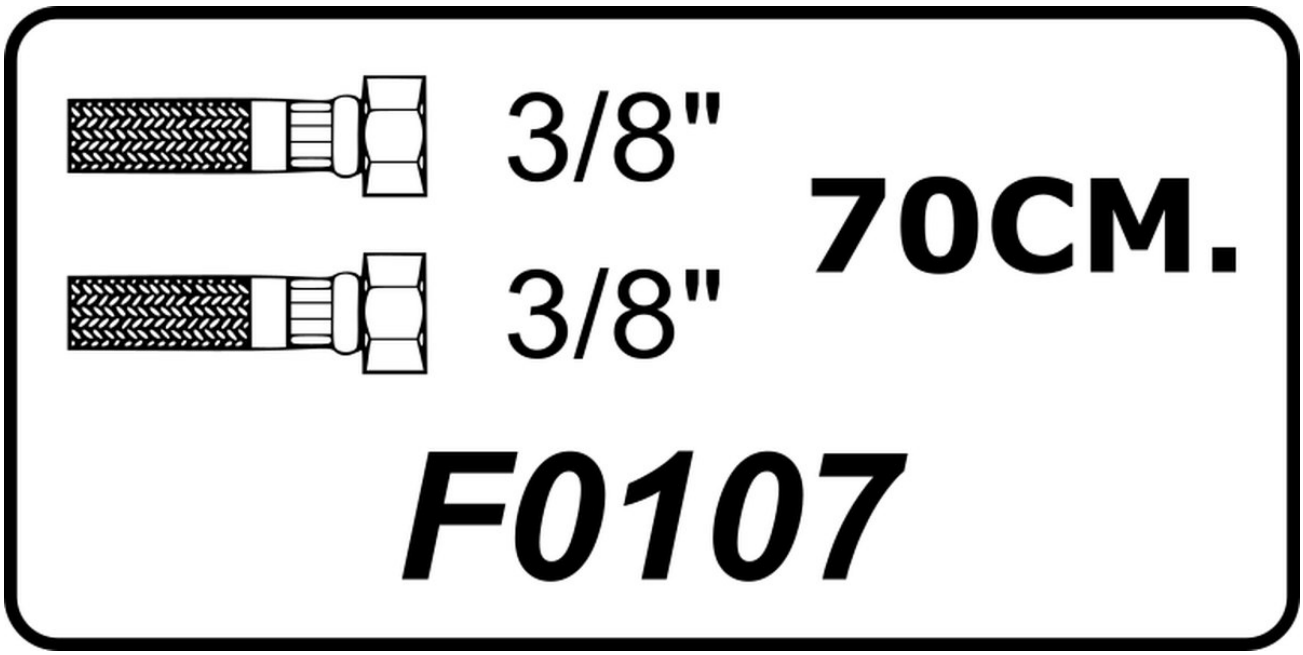

Confirm finish, quantity and destination with your quotation.

F0108 - FLEKS HORTUM 3/8"-3/8" 80CM.

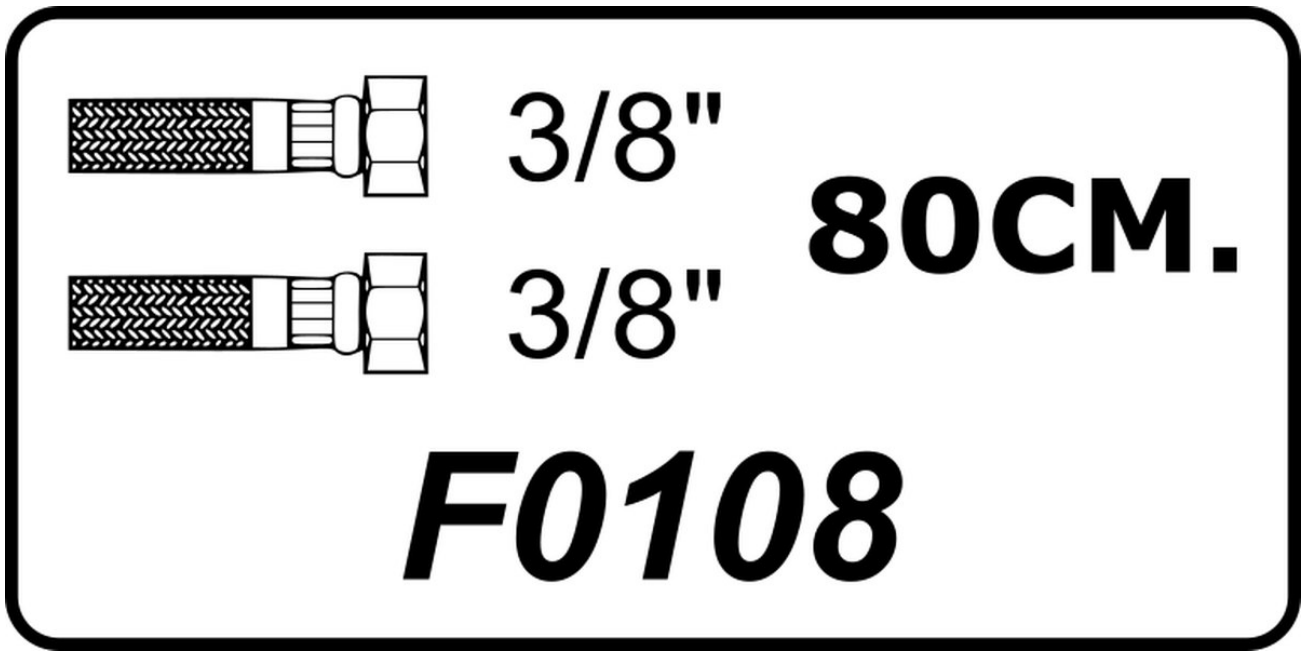

Confirm finish, quantity and destination with your quotation.

F0109 - FLEKS HORTUM 3/8"-3/8" 90CM.

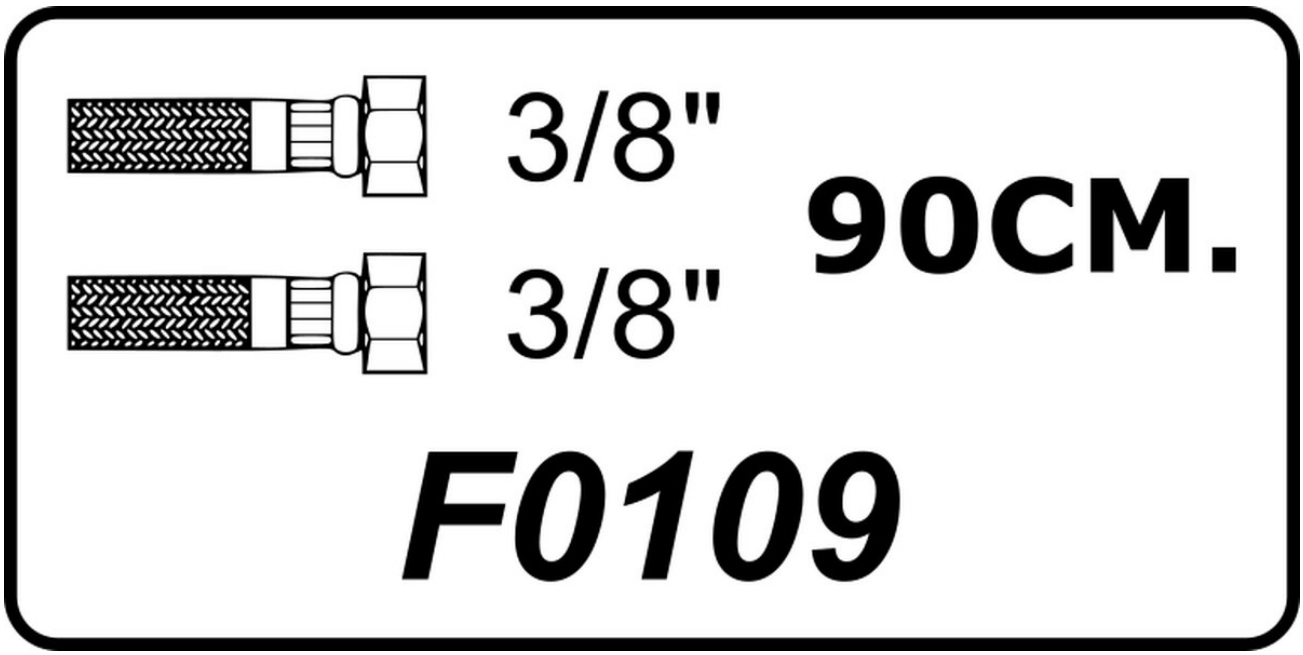

Confirm finish, quantity and destination with your quotation.

F0110 - FLEKS HORTUM 3/8"-3/8" 100CM.

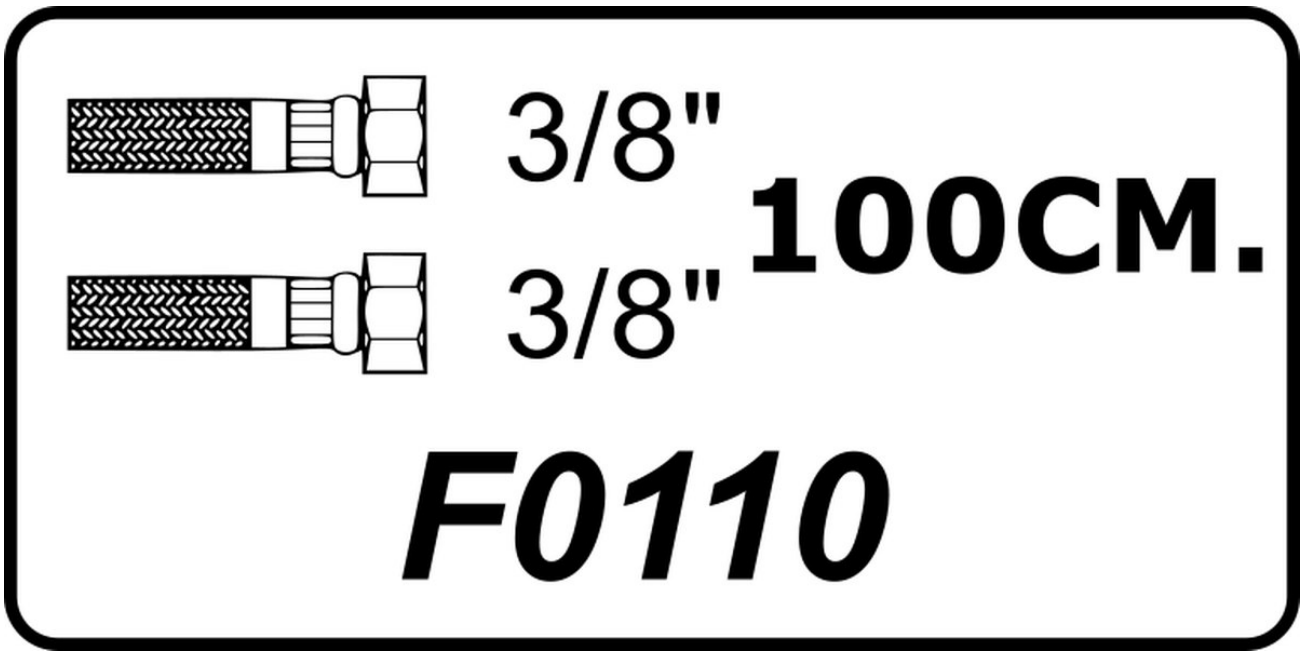

Confirm finish, quantity and destination with your quotation.

F0202 - FLEKS HORTUM 3/8"-3/8"N 20CM.

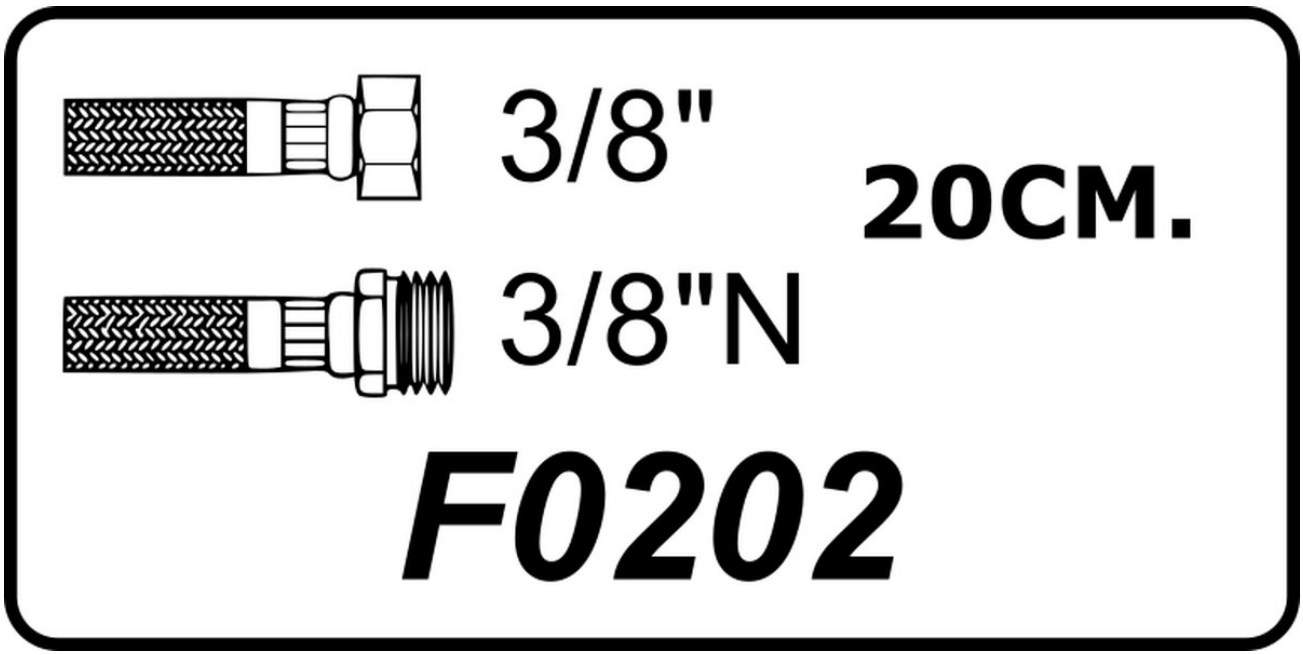

Confirm finish, quantity and destination with your quotation.

F0203 - FLEKS HORTUM 3/8"-3/8"N 30CM.

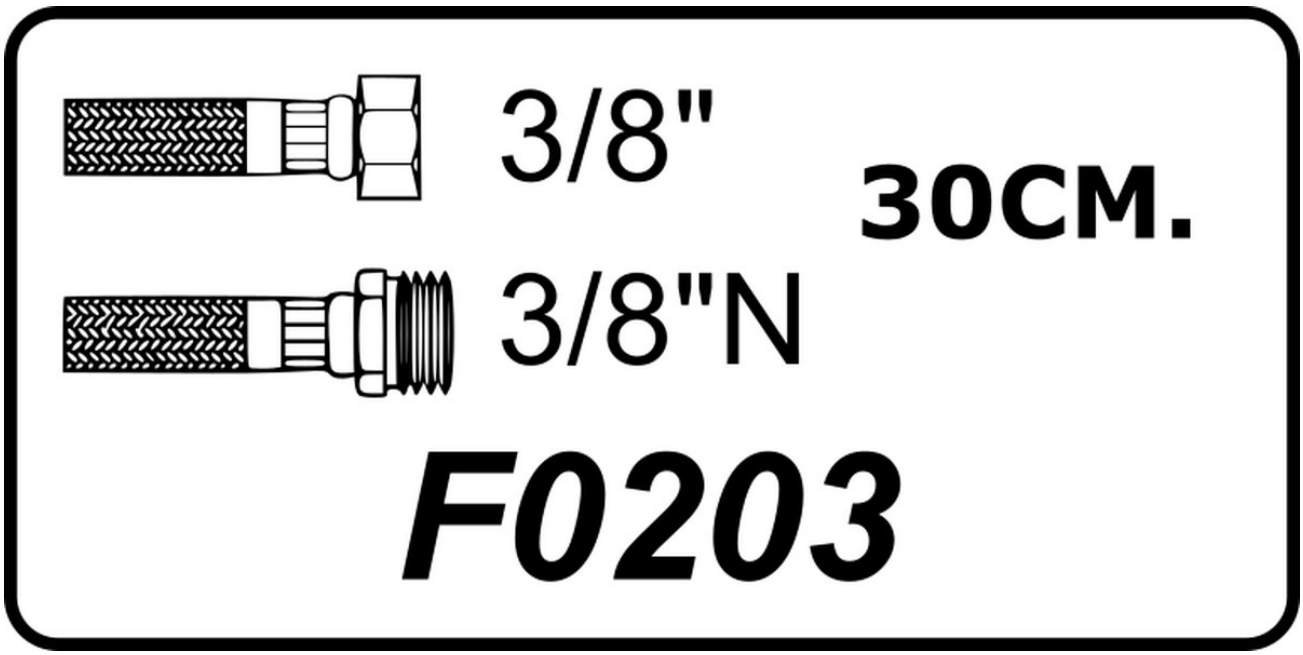

Confirm finish, quantity and destination with your quotation.

F0204 - FLEKS HORTUM 3/8"-3/8"N 40CM.

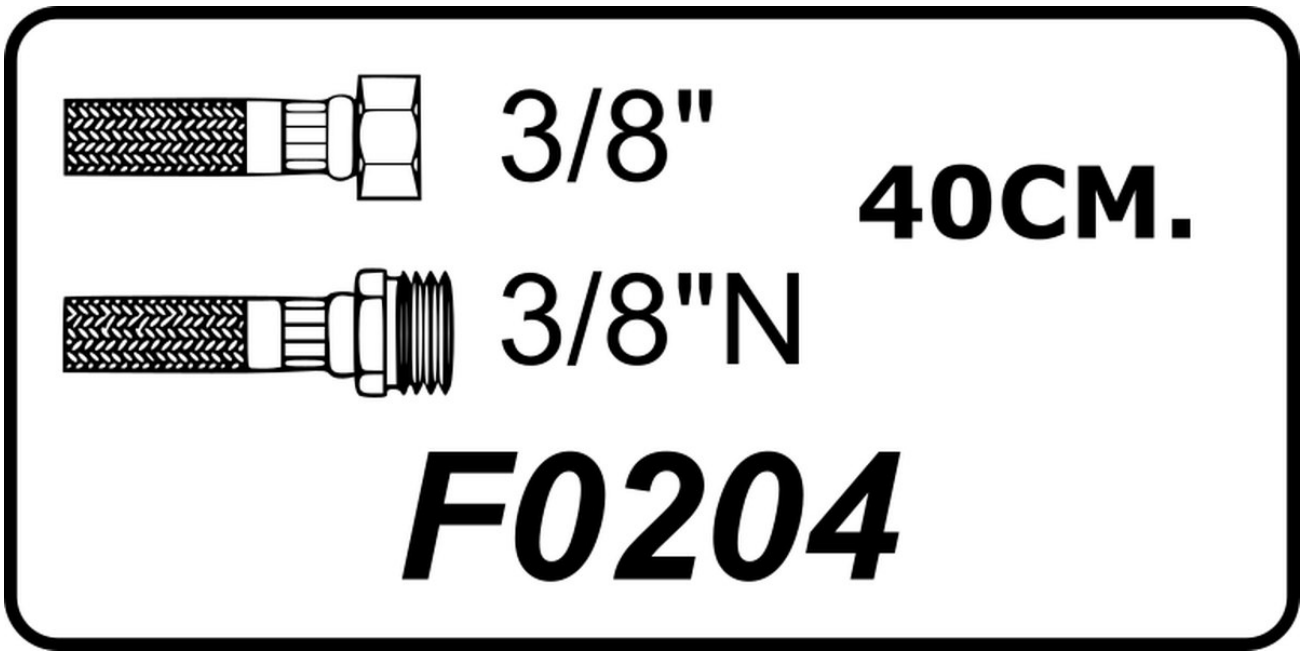

Confirm finish, quantity and destination with your quotation.

F0205 - FLEKS HORTUM 3/8"-3/8"N 50CM.

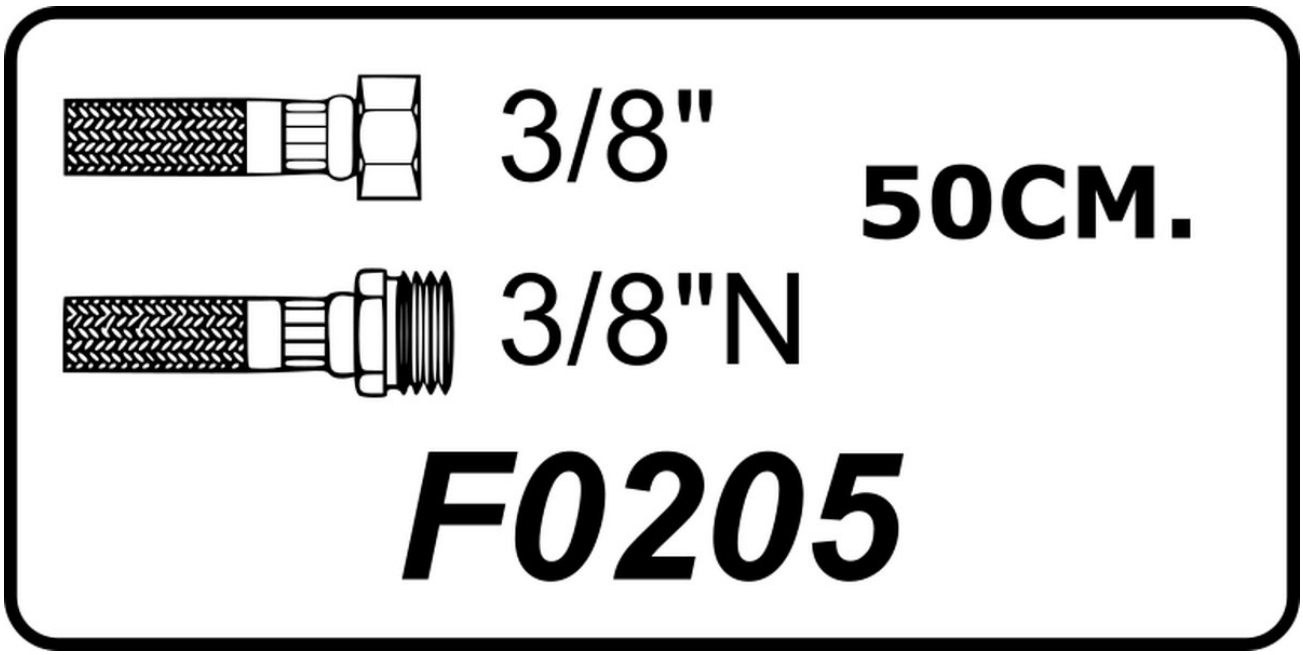

Confirm finish, quantity and destination with your quotation.

F0206 - FLEKS HORTUM 3/8"-3/8"N 60CM.

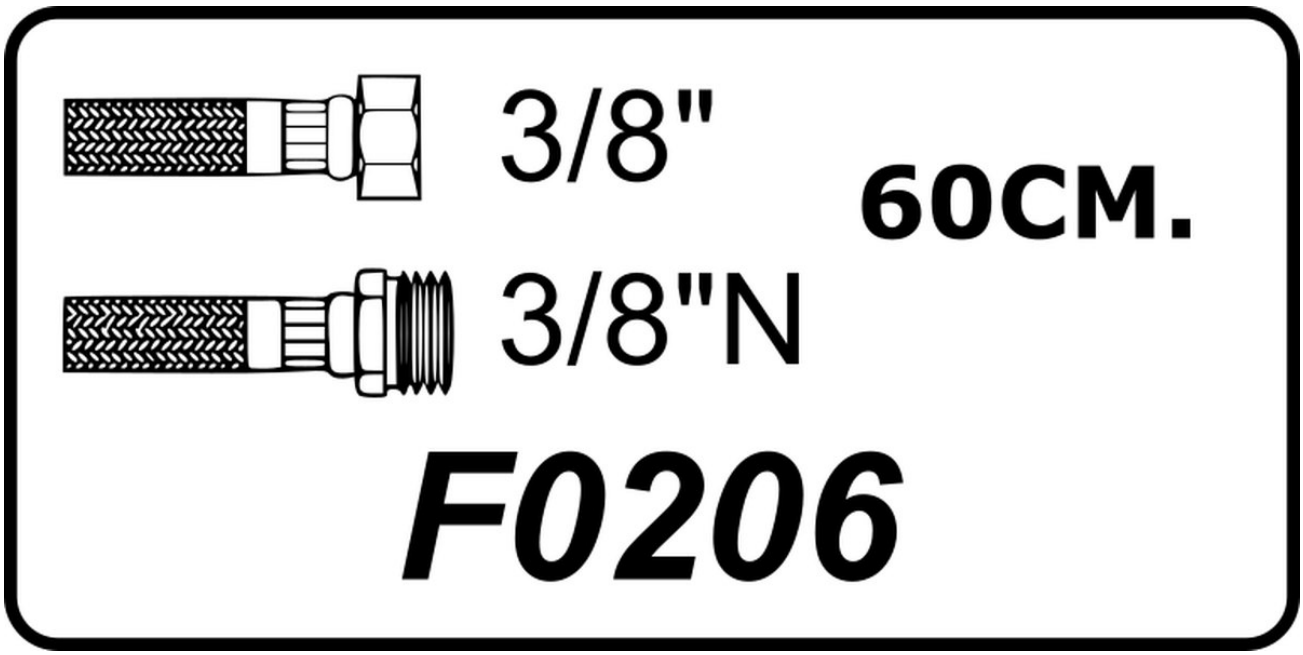

Confirm finish, quantity and destination with your quotation.

F0207 - FLEKS HORTUM 3/8"-3/8"N 70CM.

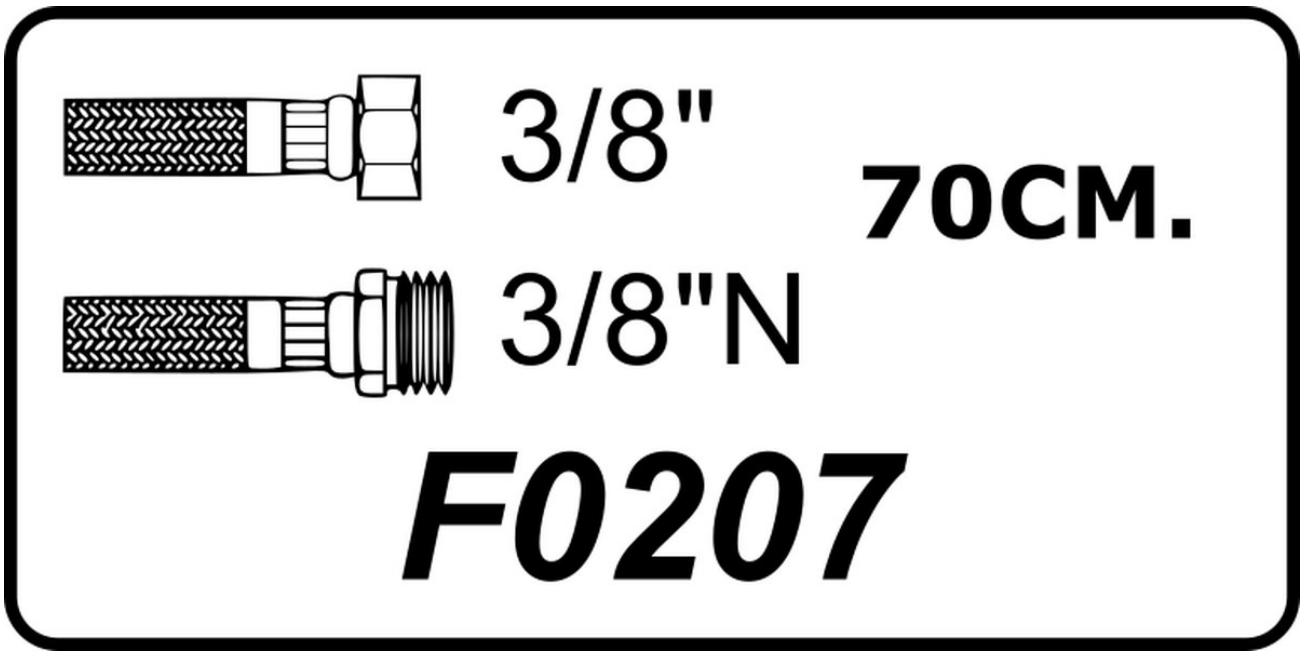

Confirm finish, quantity and destination with your quotation.

F0208 - FLEKS HORTUM 3/8"-3/8"N 80CM.

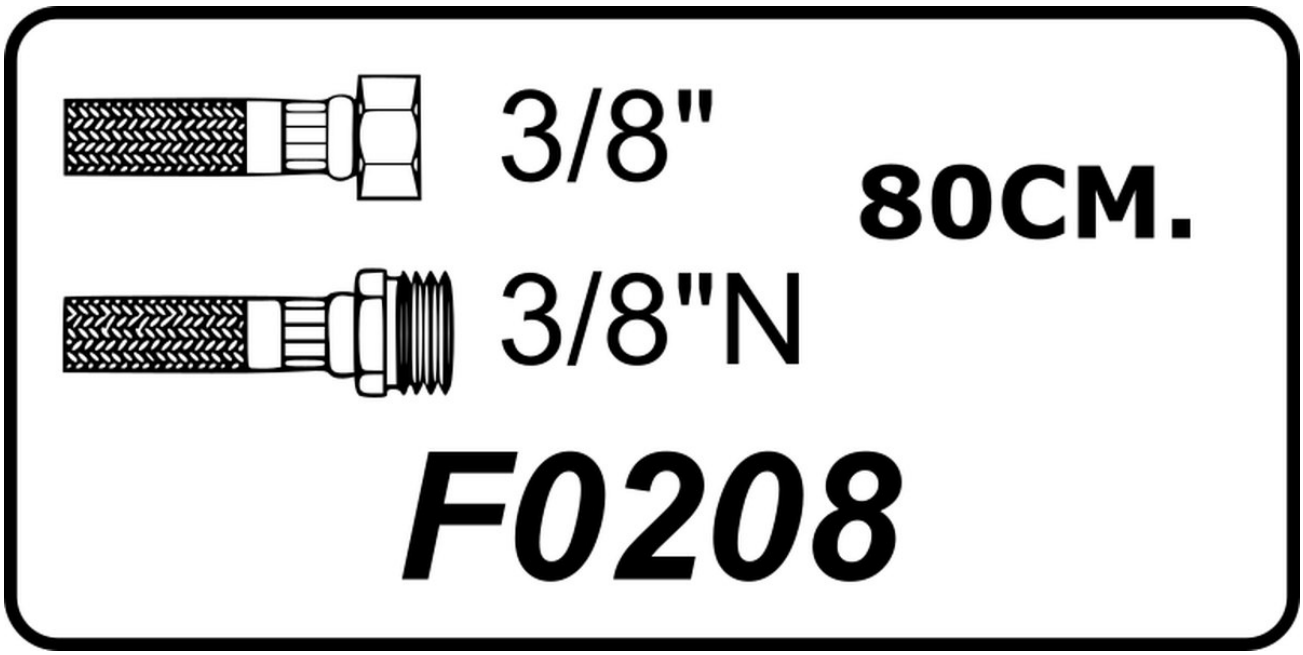

Confirm finish, quantity and destination with your quotation.

F0209 - FLEKS HORTUM 3/8"-3/8"N 90CM.

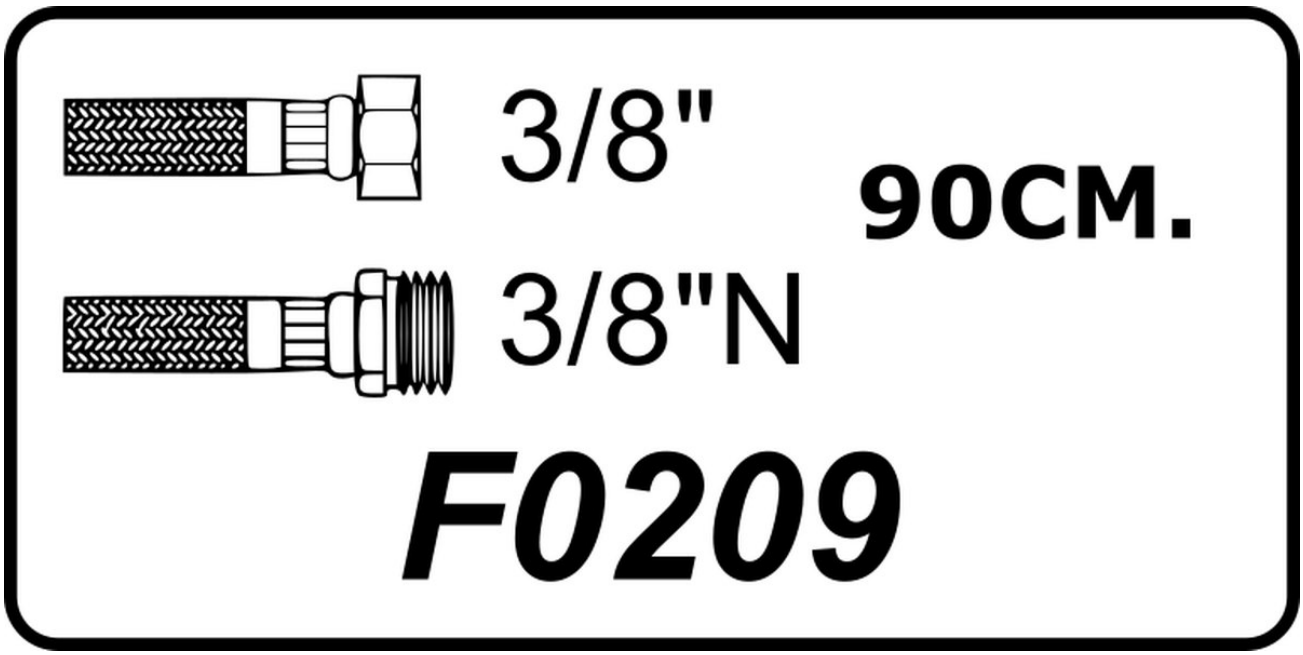

Confirm finish, quantity and destination with your quotation.

F0210 - FLEKS HORTUM 3/8"-3/8"N 100CM.

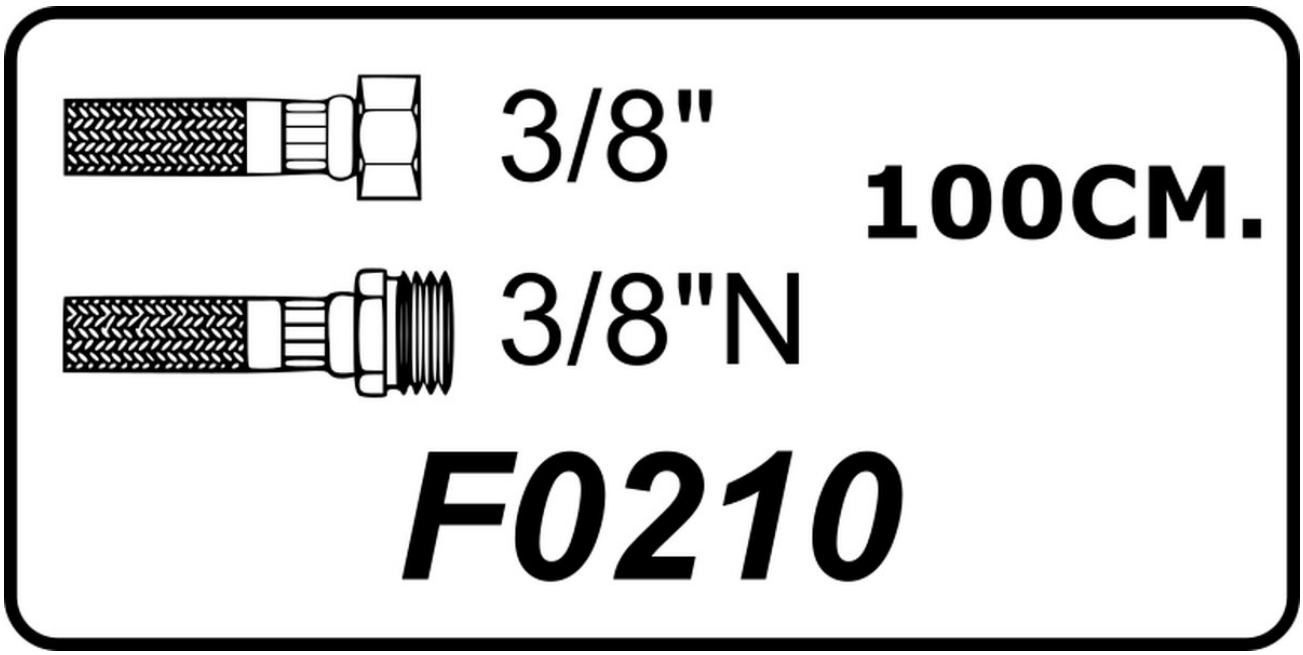

Confirm finish, quantity and destination with your quotation.

F0302 - FLEKS HORTUM 3/8"-1/2" 20CM.

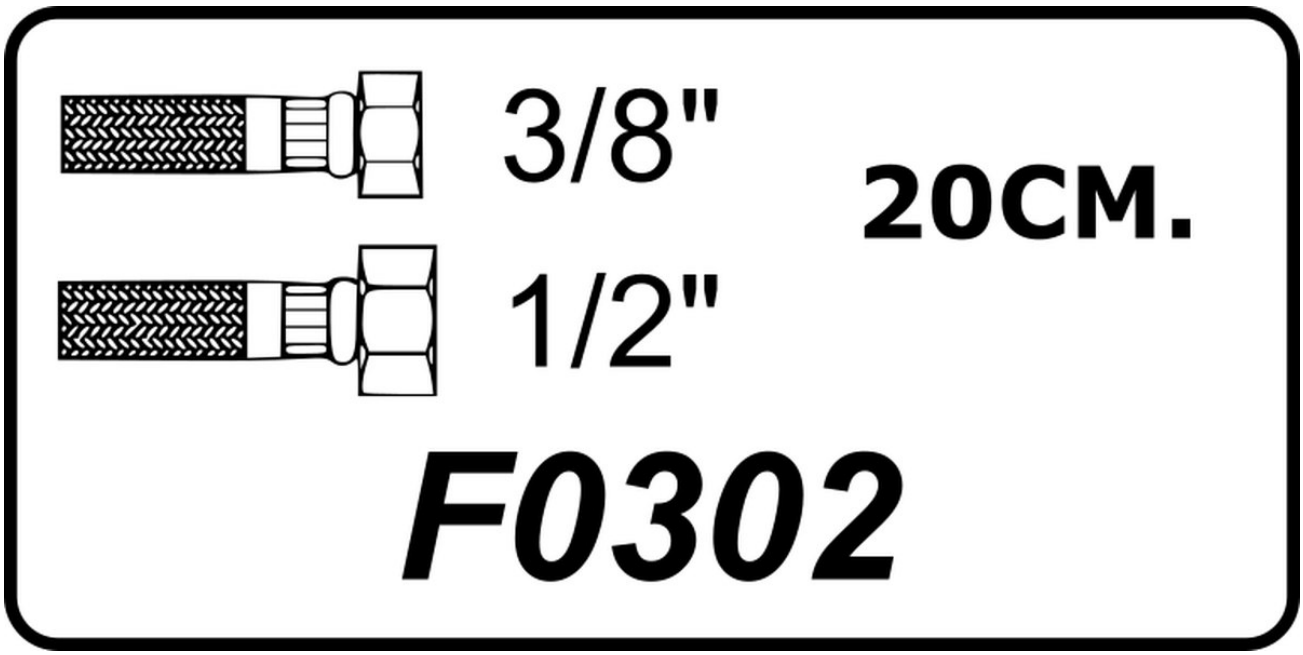

Confirm finish, quantity and destination with your quotation.

F0303 - FLEKS HORTUM 3/8"-1/2" 30CM.

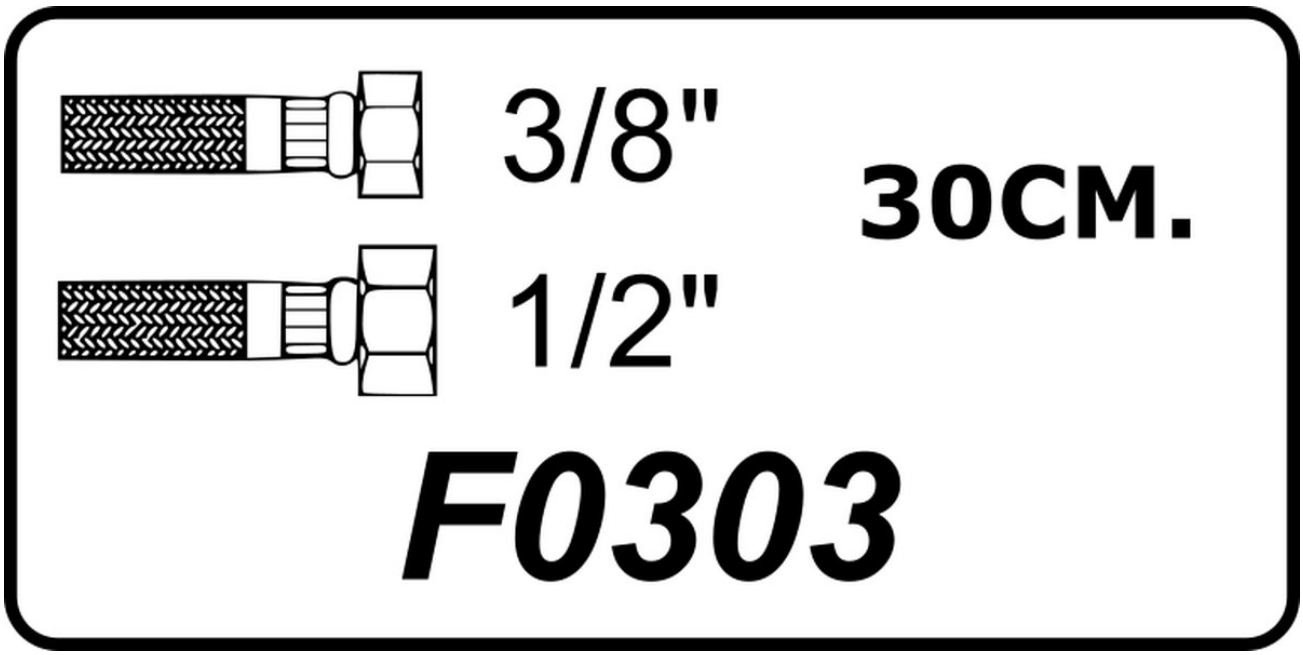

Confirm finish, quantity and destination with your quotation.

F0304 - FLEKS HORTUM 3/8"-1/2" 40CM.

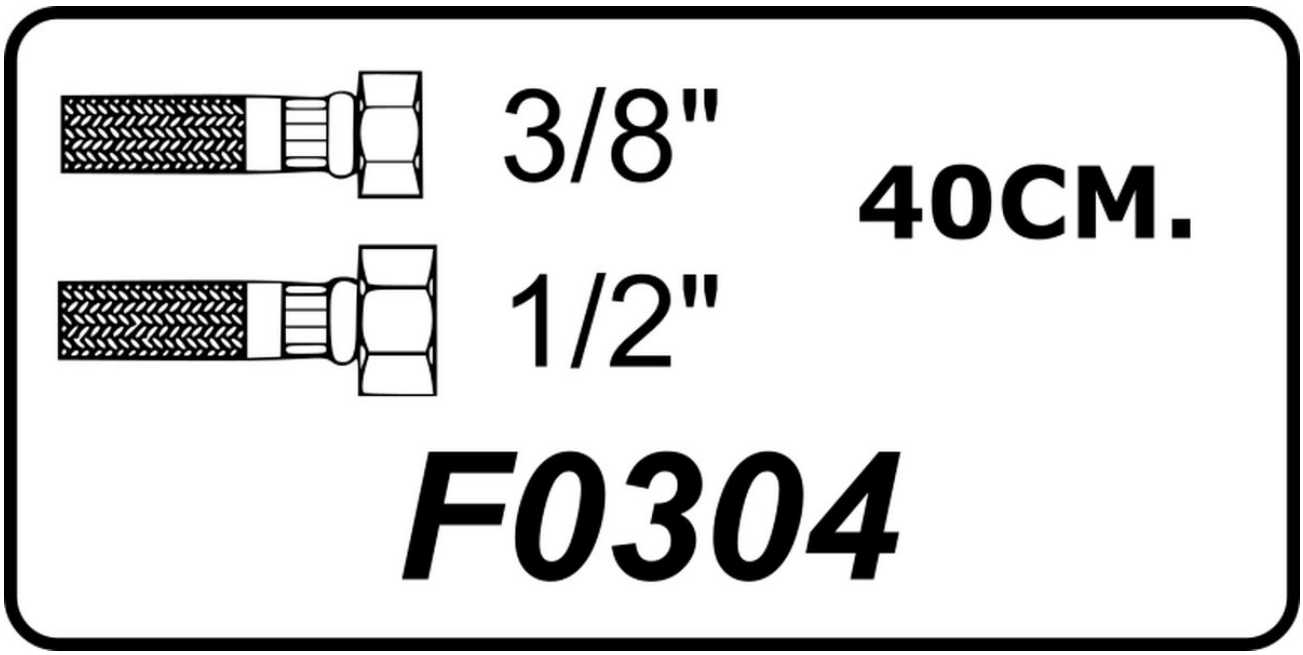

Confirm finish, quantity and destination with your quotation.

F0305 - FLEKS HORTUM 3/8"-1/2" 50CM.

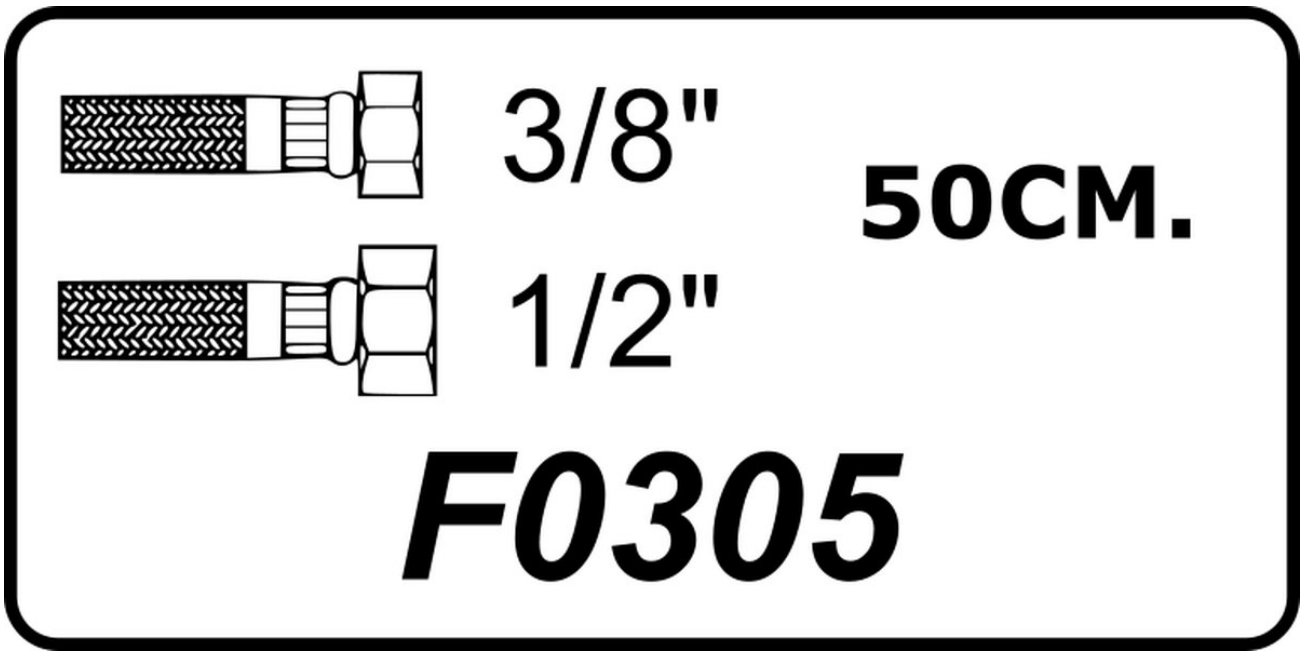

Confirm finish, quantity and destination with your quotation.

F0306 - FLEKS HORTUM 3/8"-1/2" 60CM.

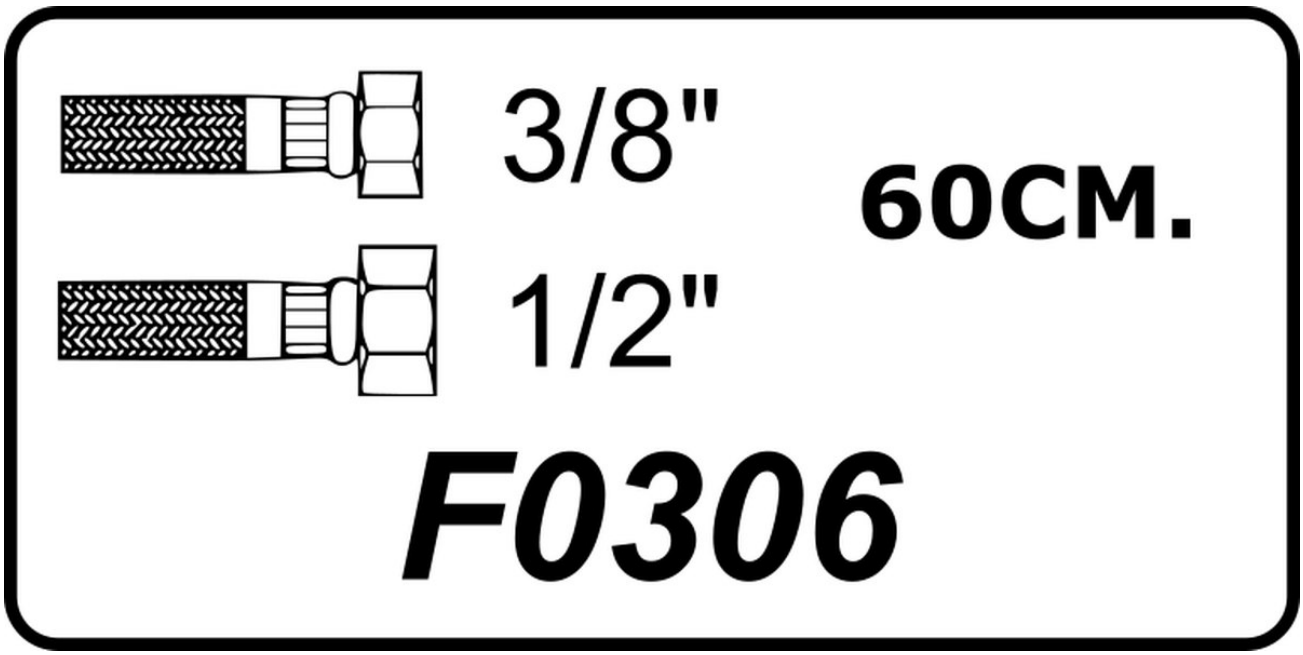

Confirm finish, quantity and destination with your quotation.

F0307 - FLEKS HORTUM 3/8"-1/2" 70CM.

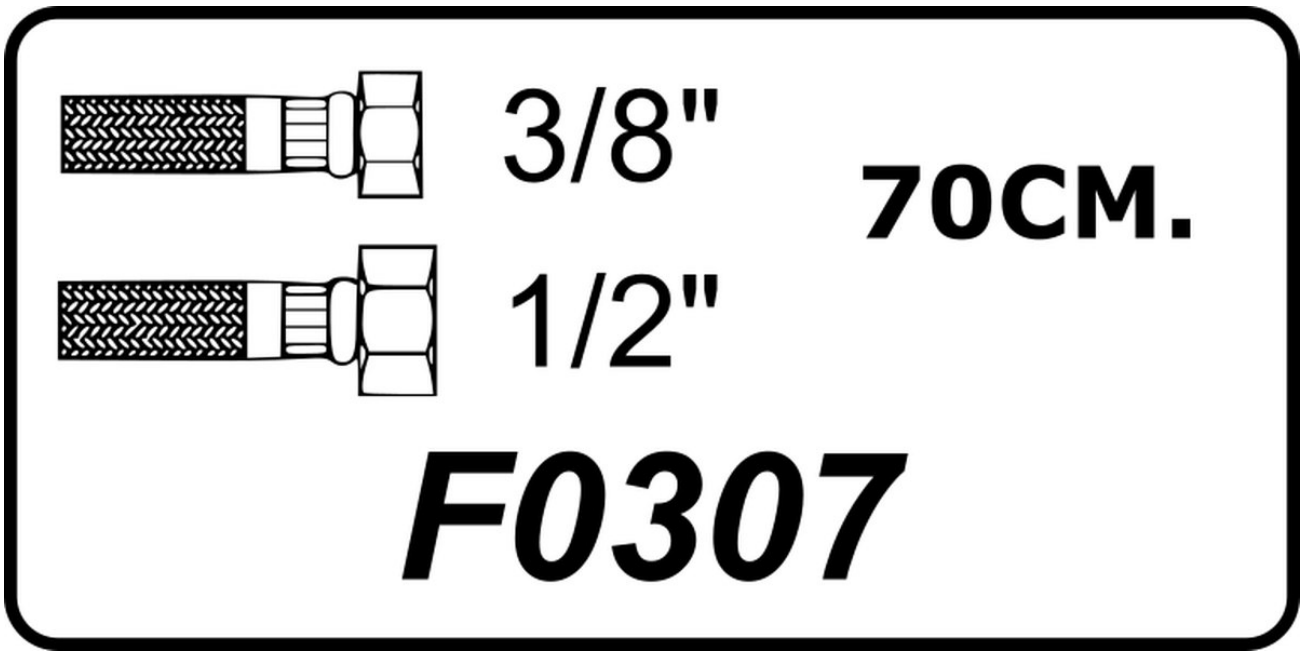

Confirm finish, quantity and destination with your quotation.

F0308 - FLEKS HORTUM 3/8"-1/2" 80CM.

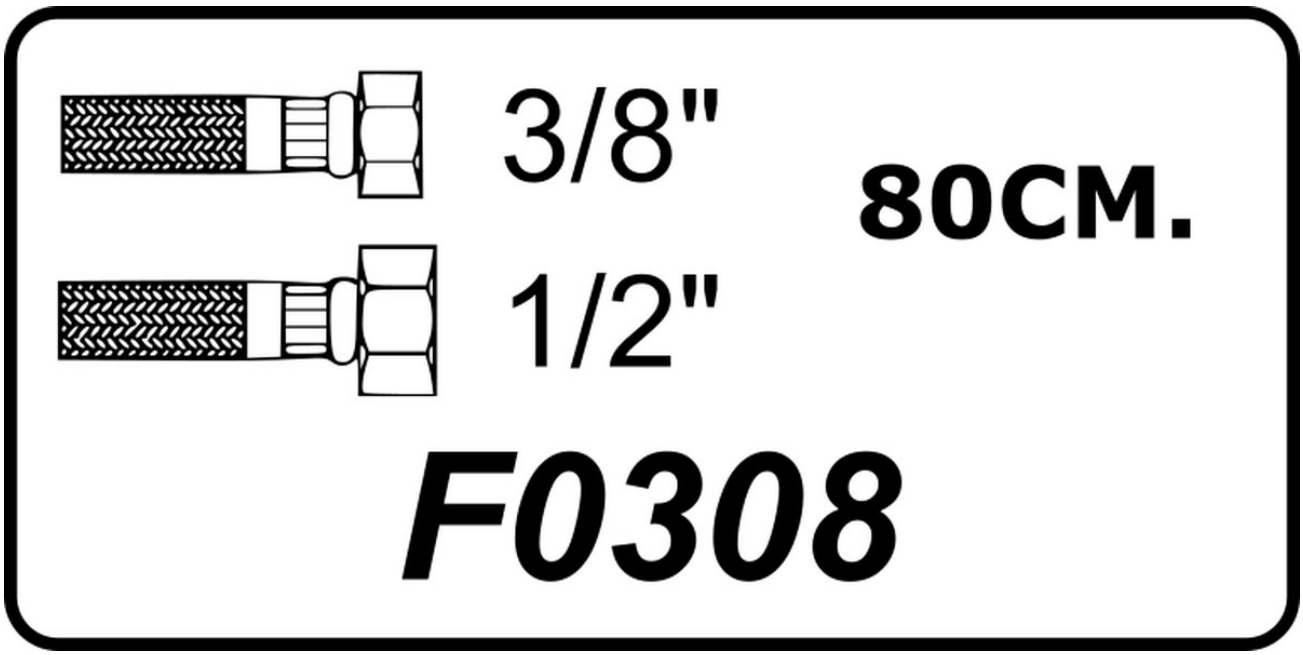

Confirm finish, quantity and destination with your quotation.

F0309 - FLEKS HORTUM 3/8"-1/2" 90CM.

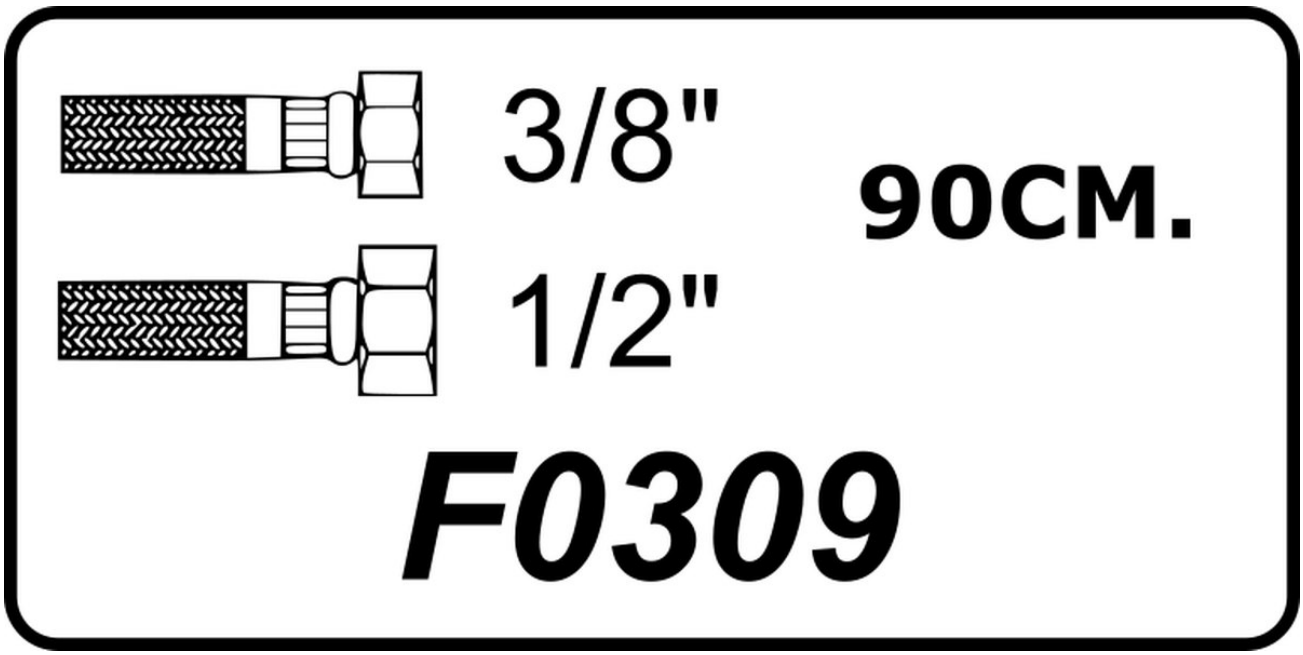

Confirm finish, quantity and destination with your quotation.

F0310 - FLEKS HORTUM 3/8"-1/2" 100CM.

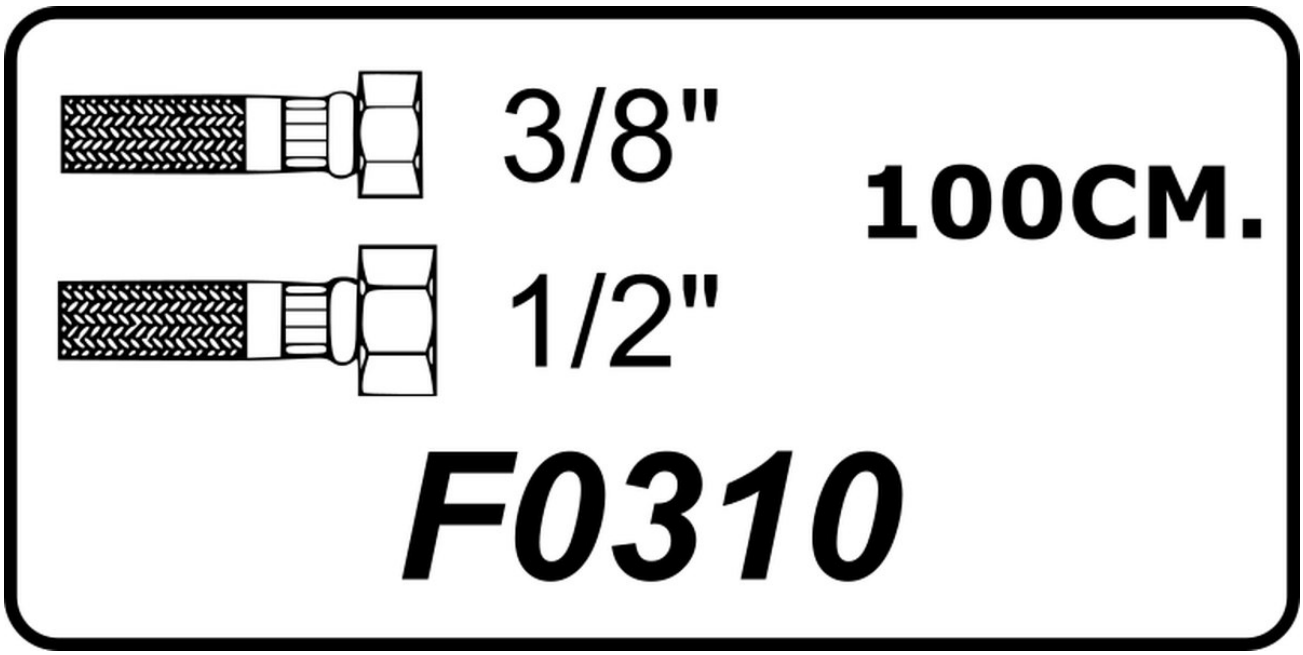

Confirm finish, quantity and destination with your quotation.

F0402 - FLEKS HORTUM 1/2"-1/2" 20CM.

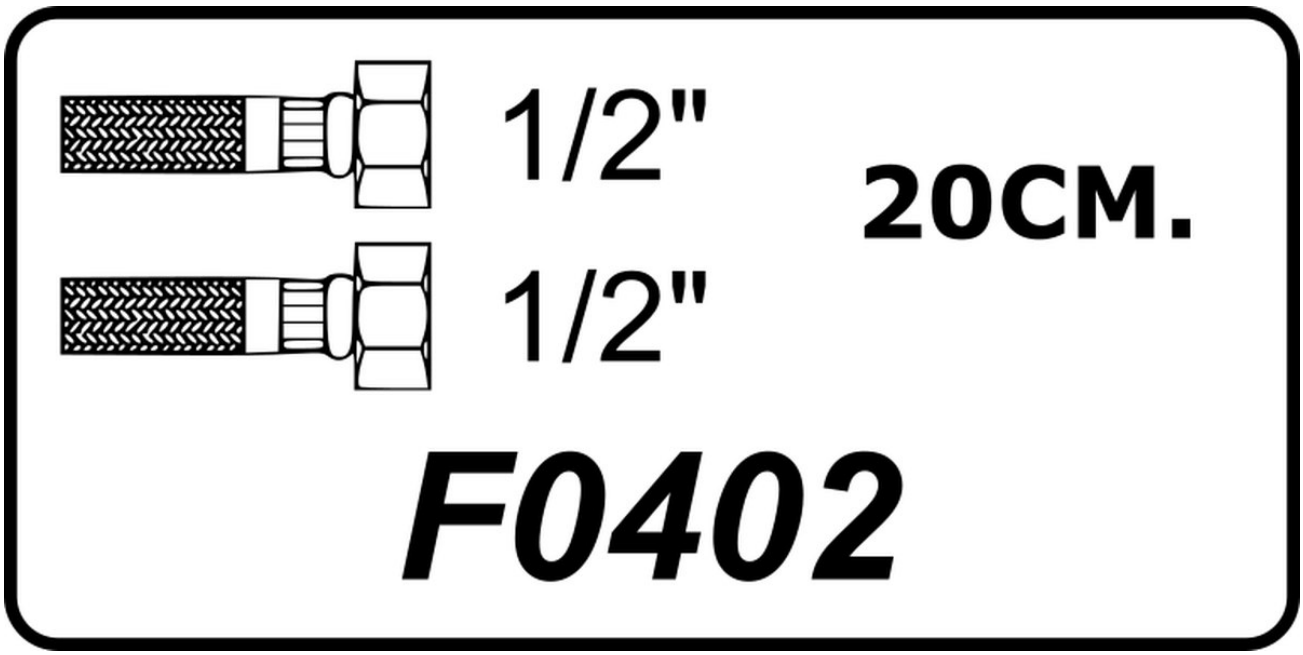

Confirm finish, quantity and destination with your quotation.

F0403 - FLEKS HORTUM 1/2"-1/2" 30CM.

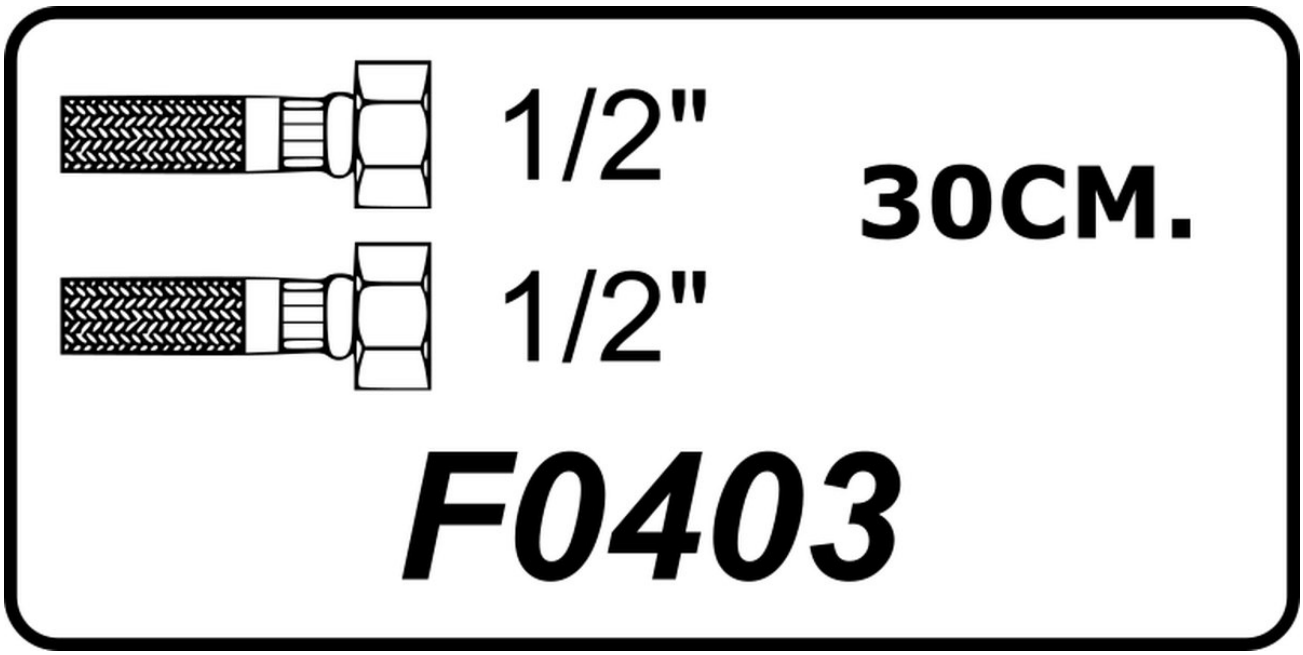

Confirm finish, quantity and destination with your quotation.

F0404 - FLEKS HORTUM 1/2"-1/2" 40CM.

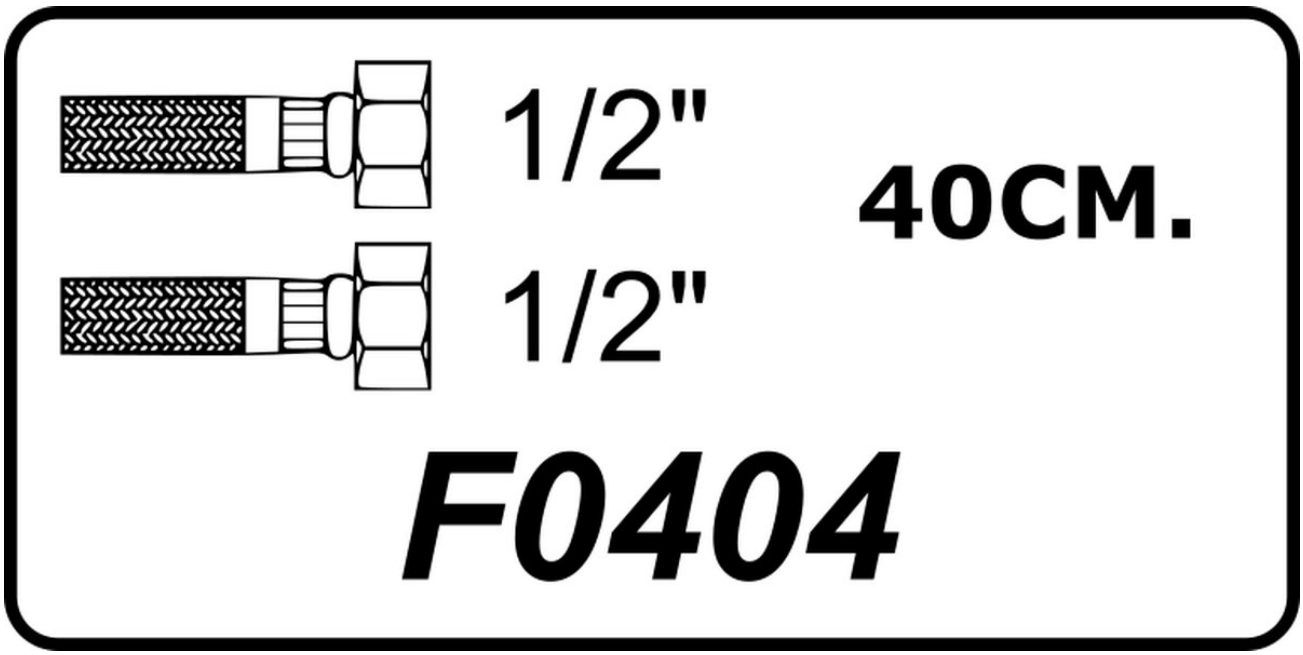

Confirm finish, quantity and destination with your quotation.

F0405 - FLEKS HORTUM 1/2"-1/2" 50CM.

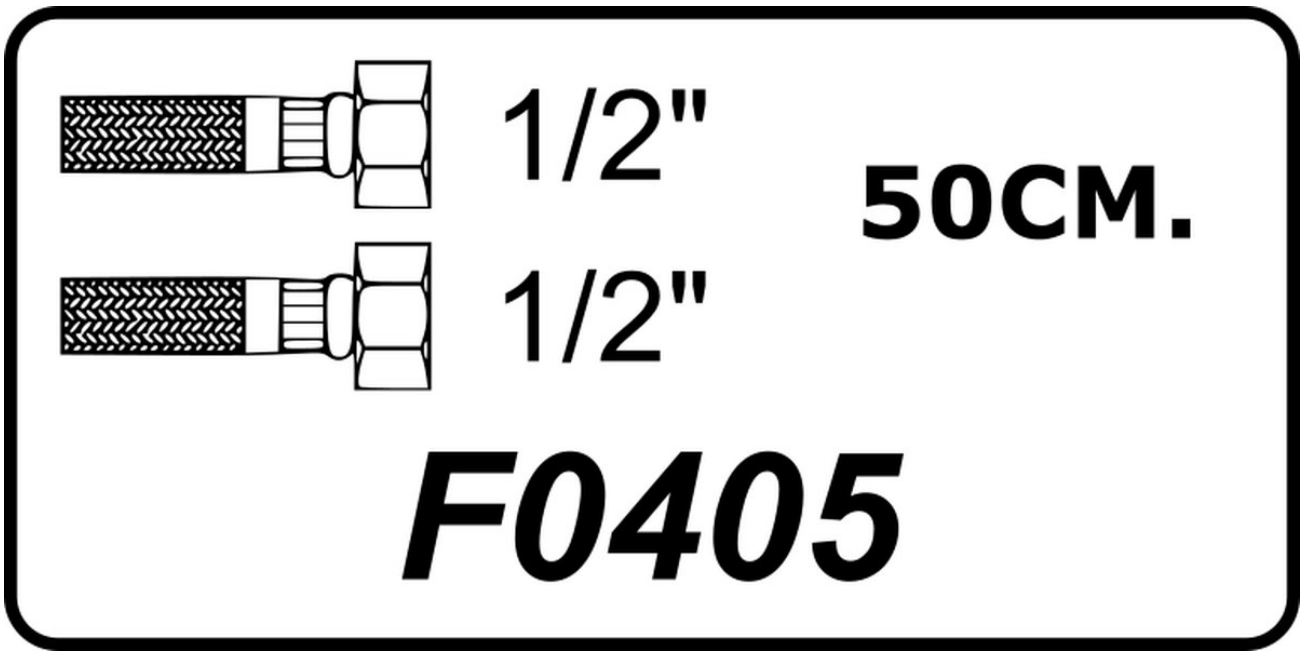

Confirm finish, quantity and destination with your quotation.

F0406 - FLEKS HORTUM 1/2"-1/2" 60CM.

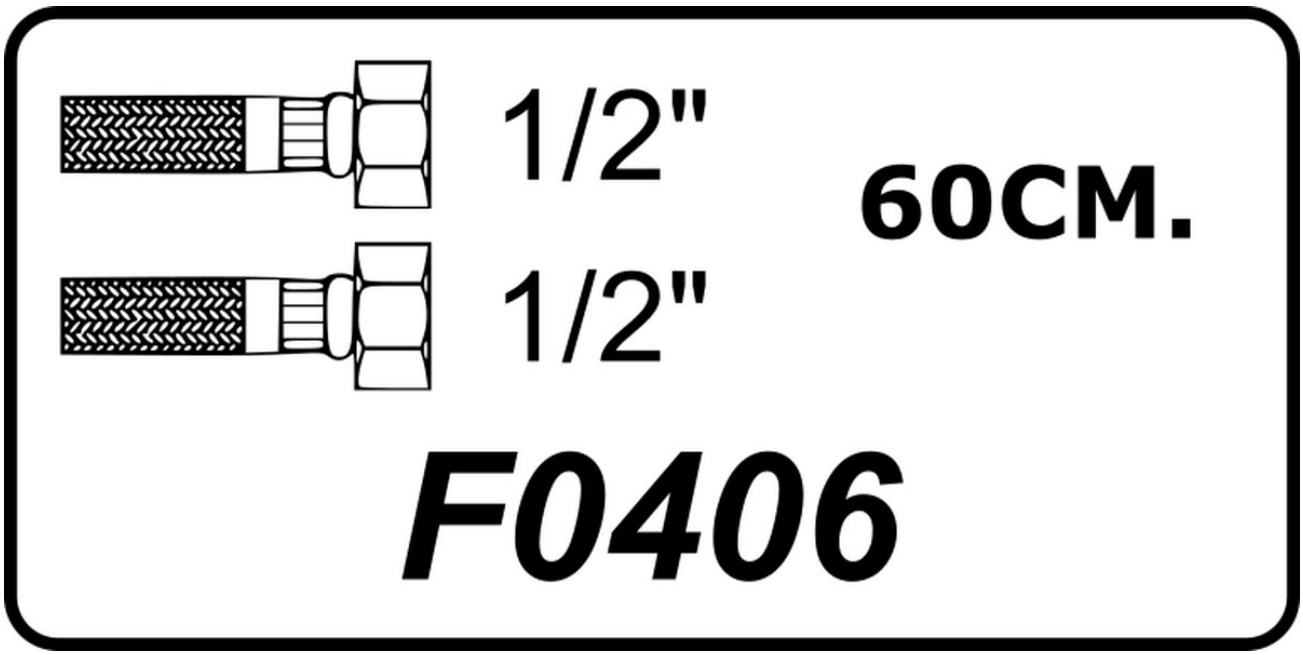

Confirm finish, quantity and destination with your quotation.

F0407 - FLEKS HORTUM 1/2"-1/2" 70CM.

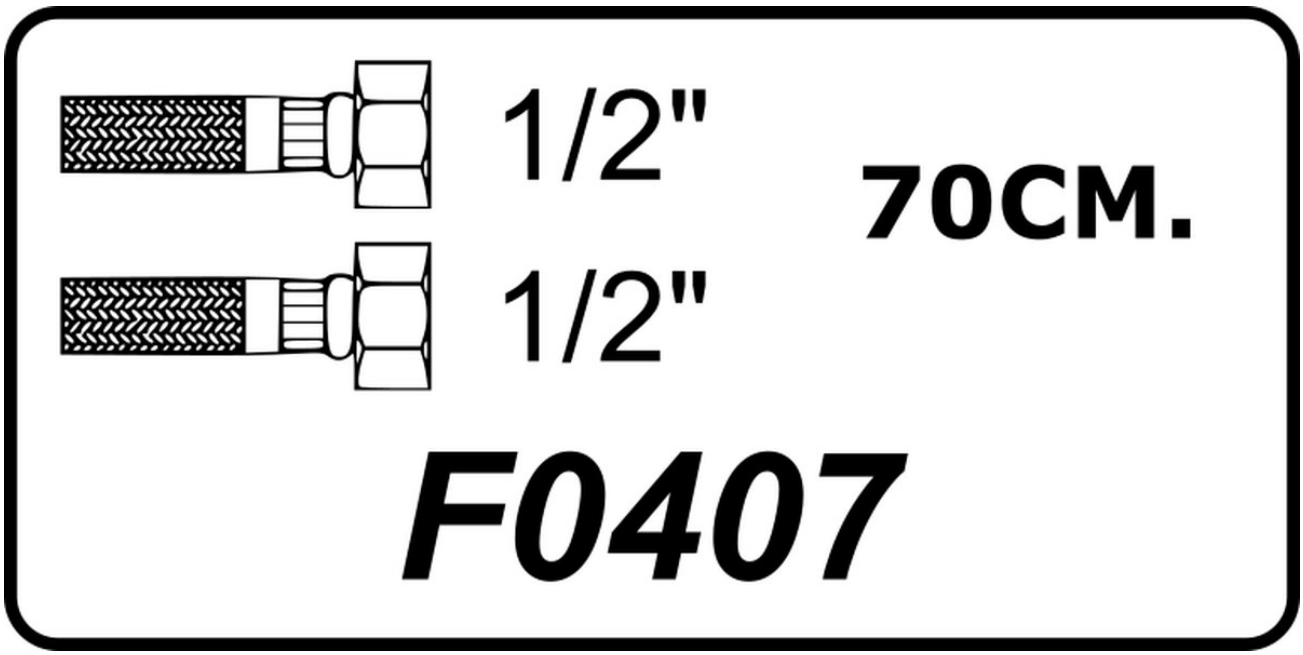

Confirm finish, quantity and destination with your quotation.

F0408 - FLEKS HORTUM 1/2"-1/2" 80CM.

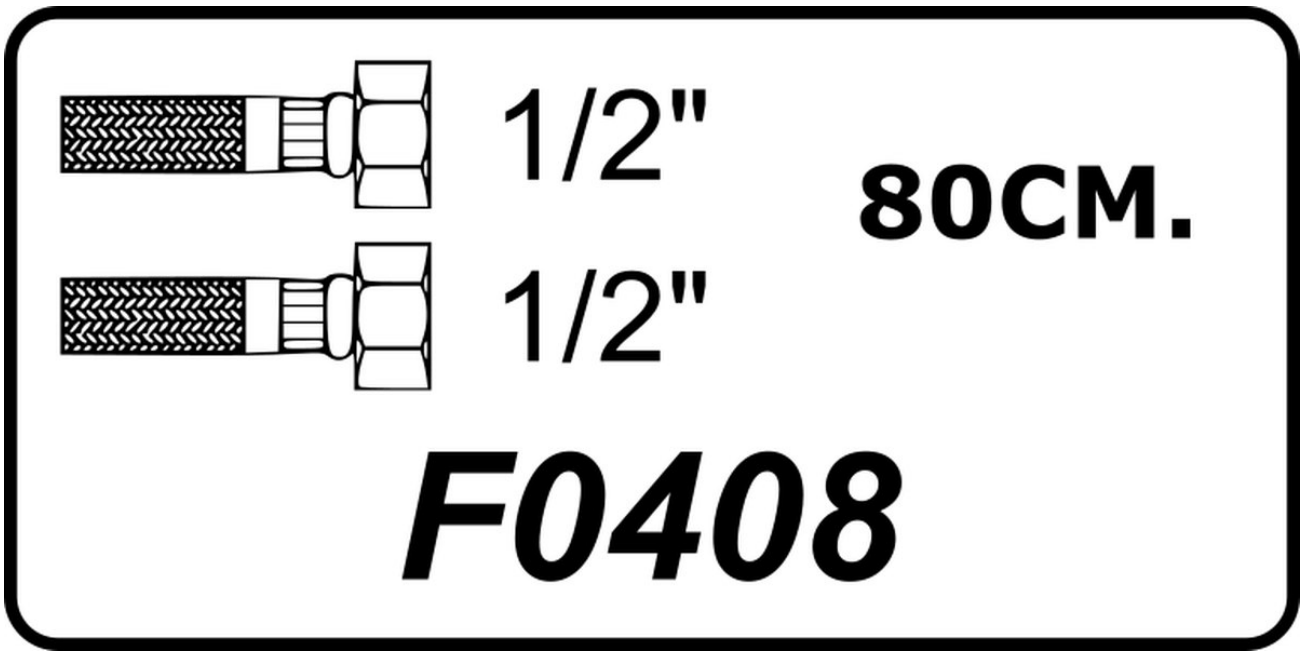

Confirm finish, quantity and destination with your quotation.

F0409 - FLEKS HORTUM 1/2"-1/2" 90CM.

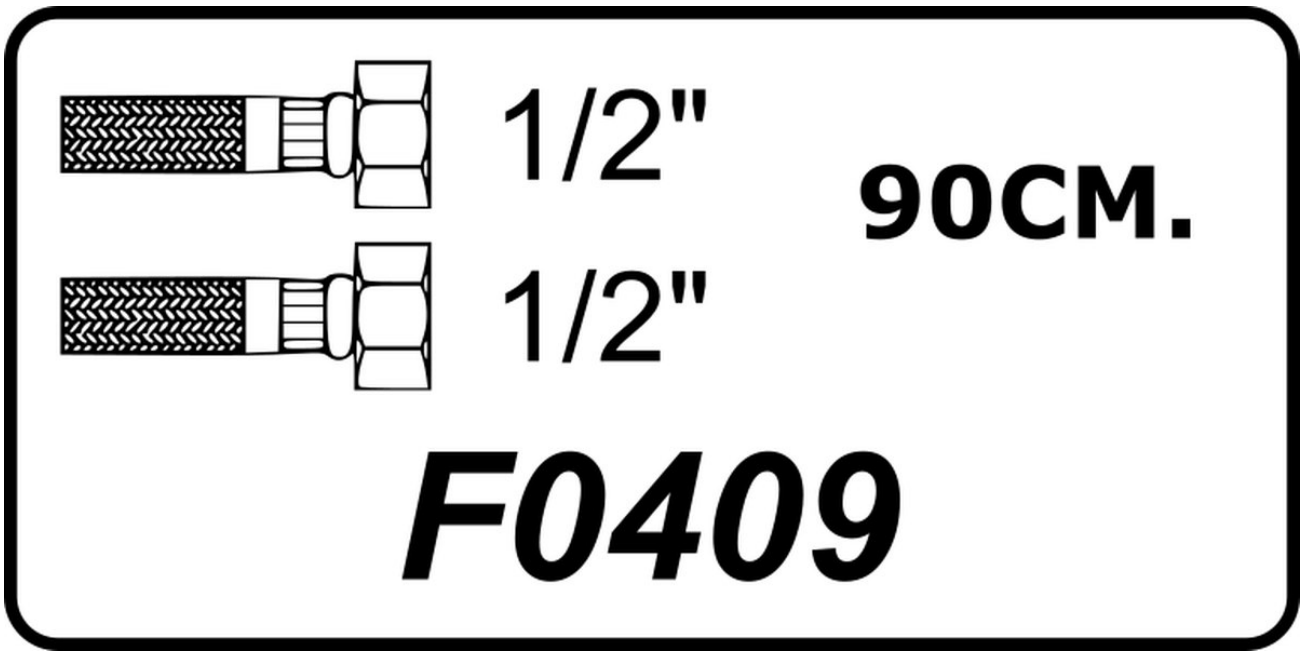

Confirm finish, quantity and destination with your quotation.

F0410 - FLEKS HORTUM 1/2"-1/2" 100CM.

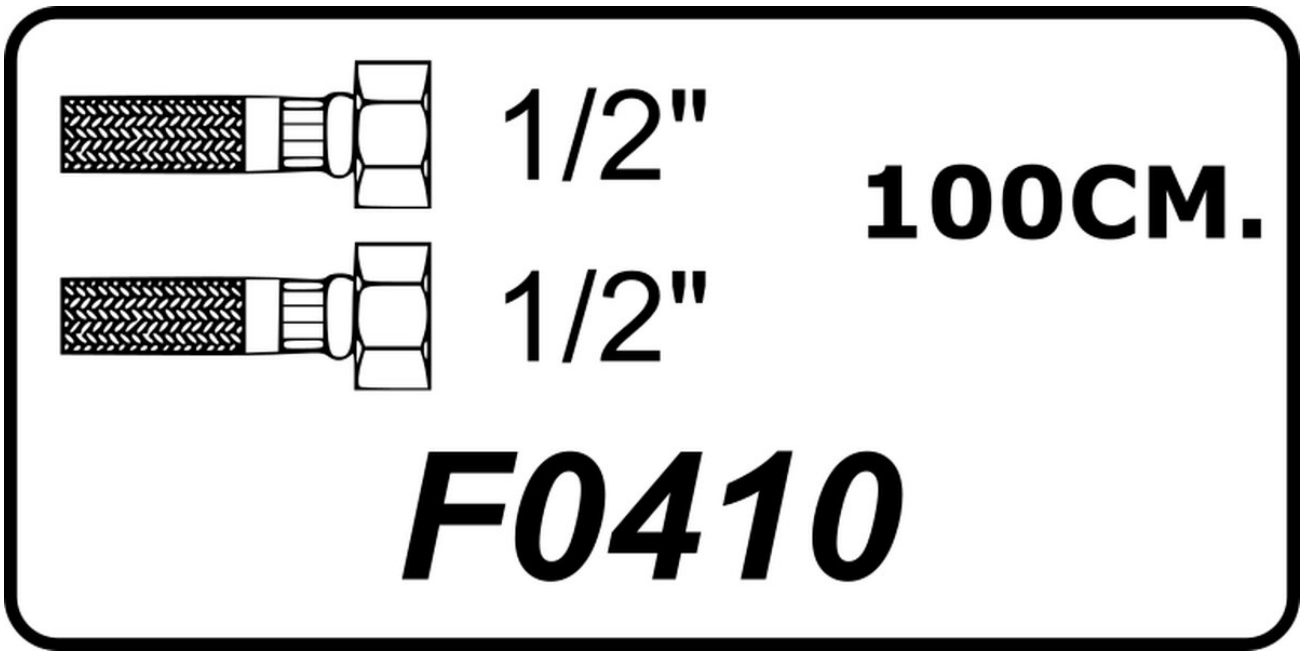

Confirm finish, quantity and destination with your quotation.

F0502 - FLEKS HORTUM 1/2"-1/2"N 20CM.

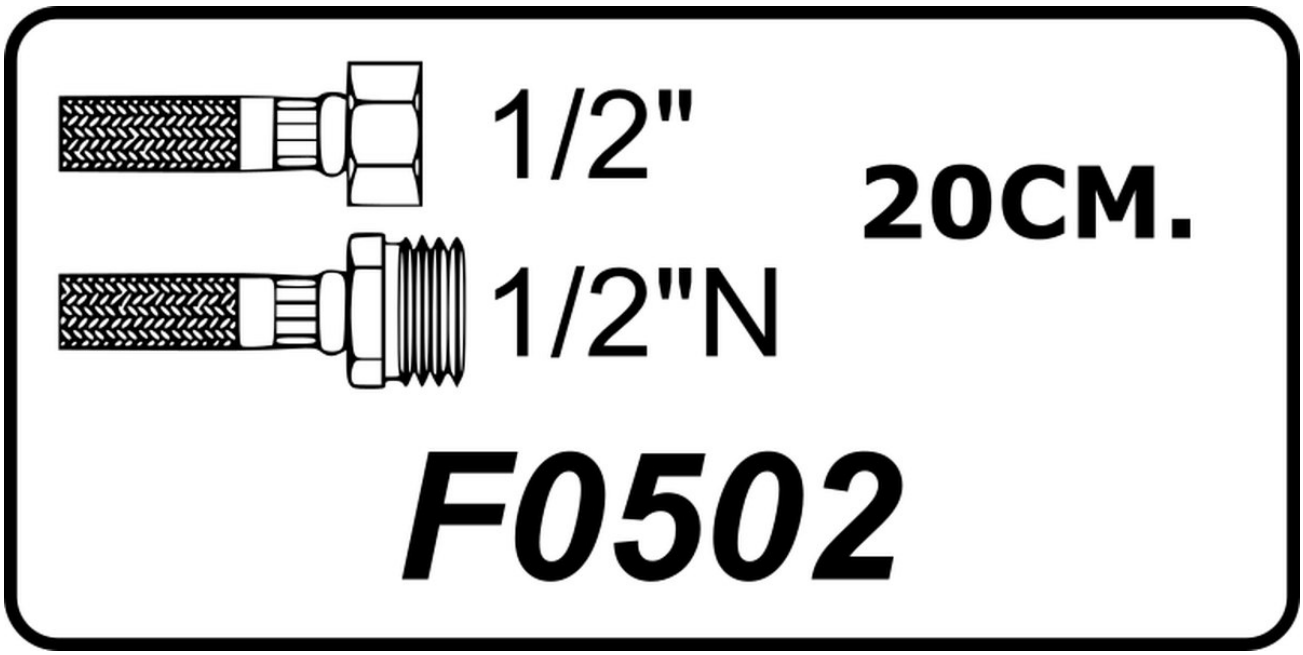

Confirm finish, quantity and destination with your quotation.

F0503 - FLEKS HORTUM 1/2"-1/2"N 30CM.

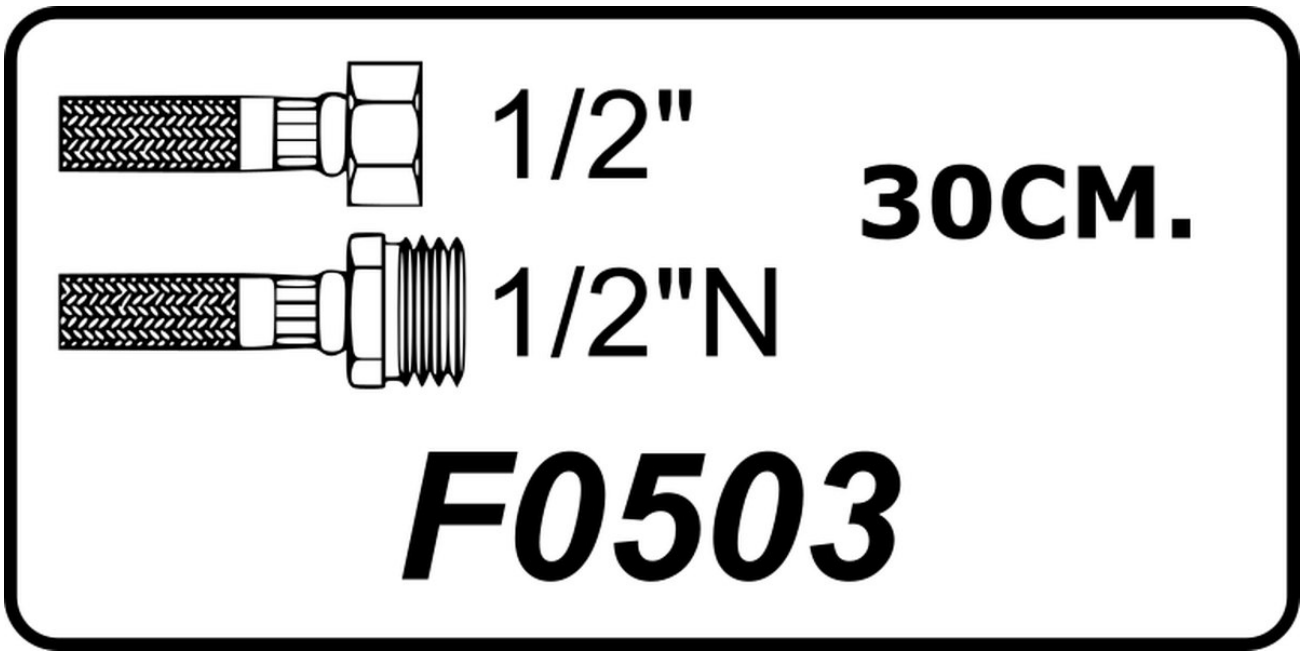

Confirm finish, quantity and destination with your quotation.

F0504 - FLEKS HORTUM 1/2"-1/2"N 40CM.

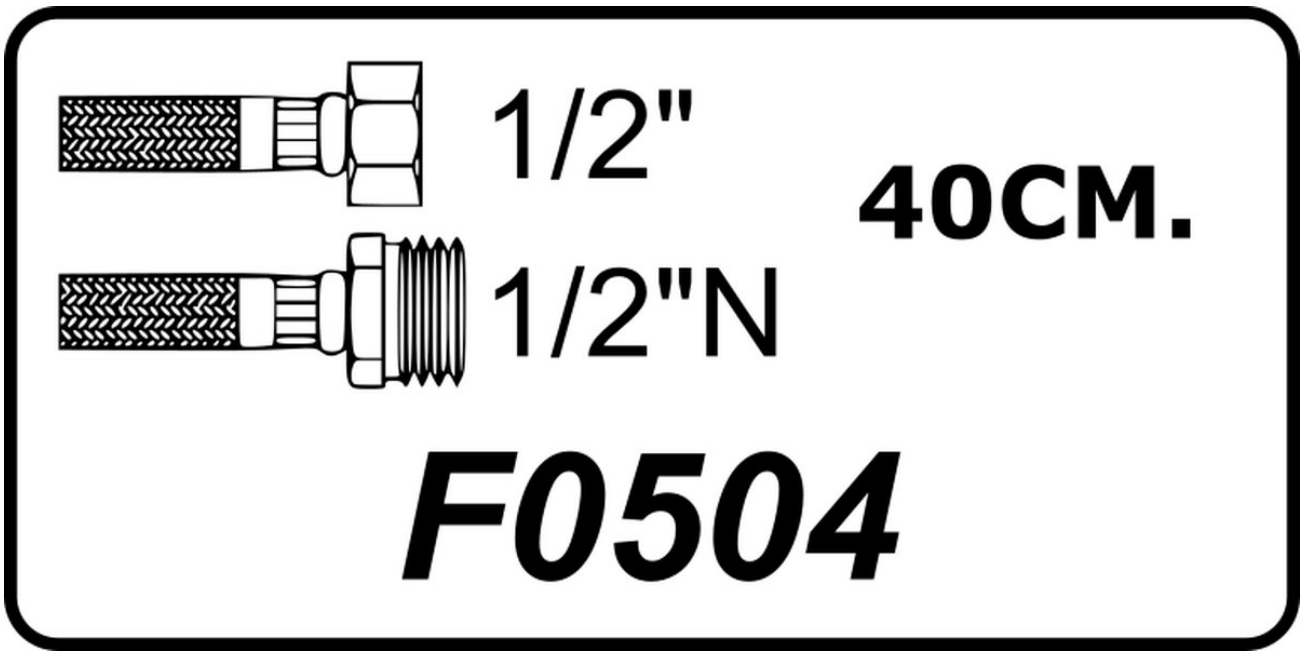

Confirm finish, quantity and destination with your quotation.

F0505 - FLEKS HORTUM 1/2"-1/2"N 50CM.

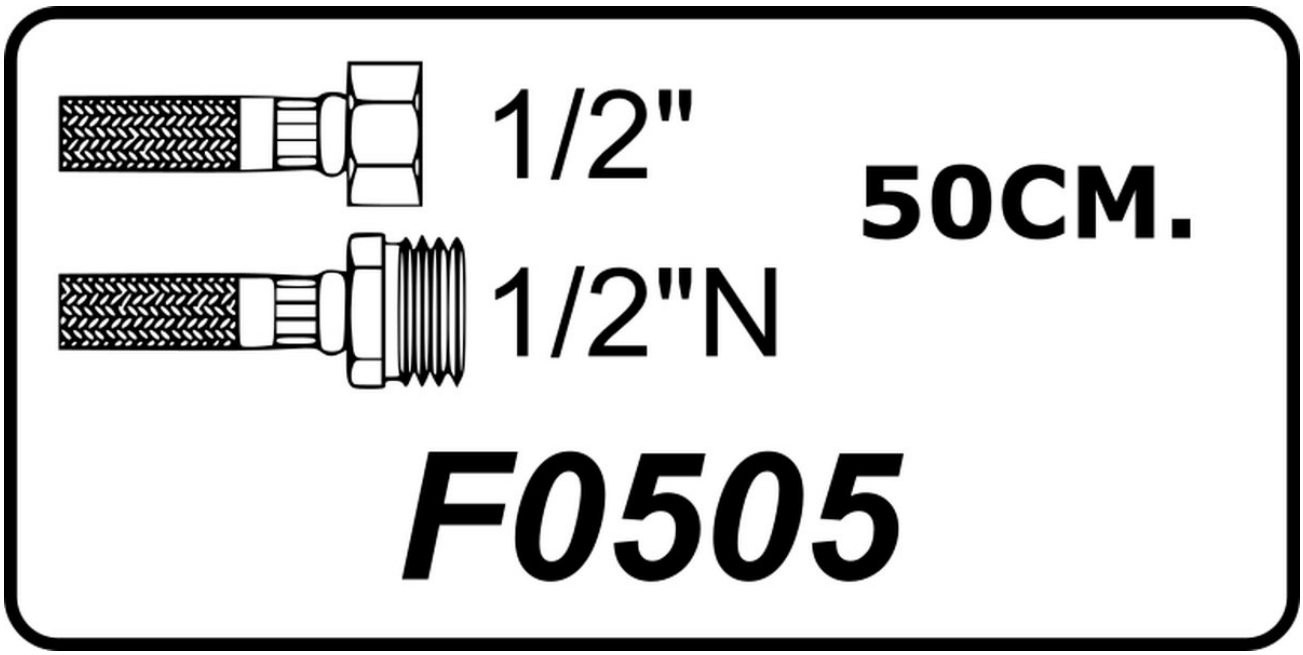

Confirm finish, quantity and destination with your quotation.

F0506 - FLEKS HORTUM 1/2"-1/2"N 60CM.

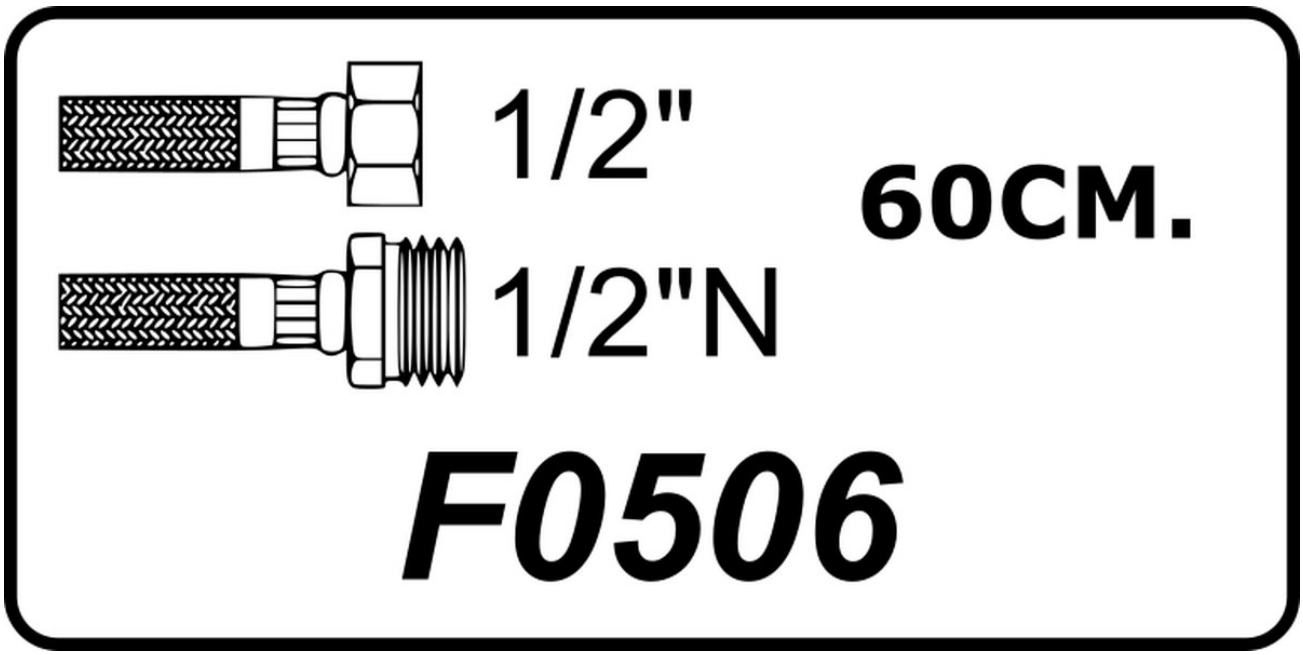

Confirm finish, quantity and destination with your quotation.

F0507 - FLEKS HORTUM 1/2"-1/2"N 70CM.

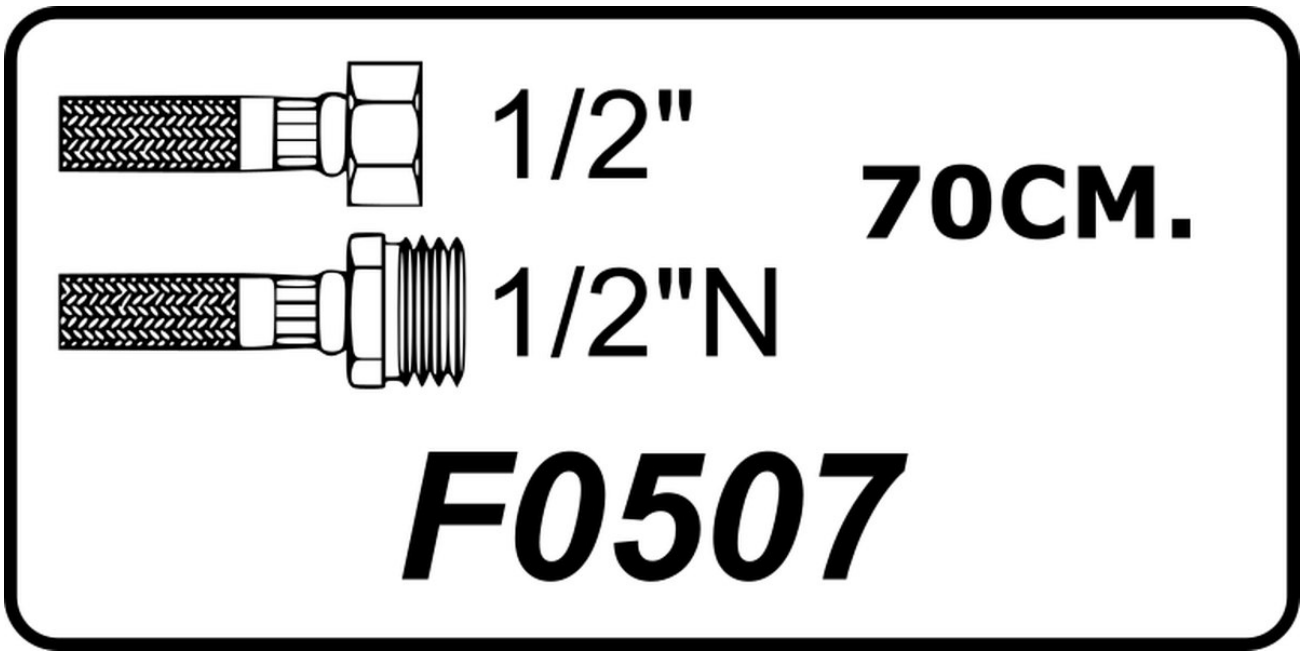

Confirm finish, quantity and destination with your quotation.

F0508 - FLEKS HORTUM 1/2"-1/2"N 80CM.

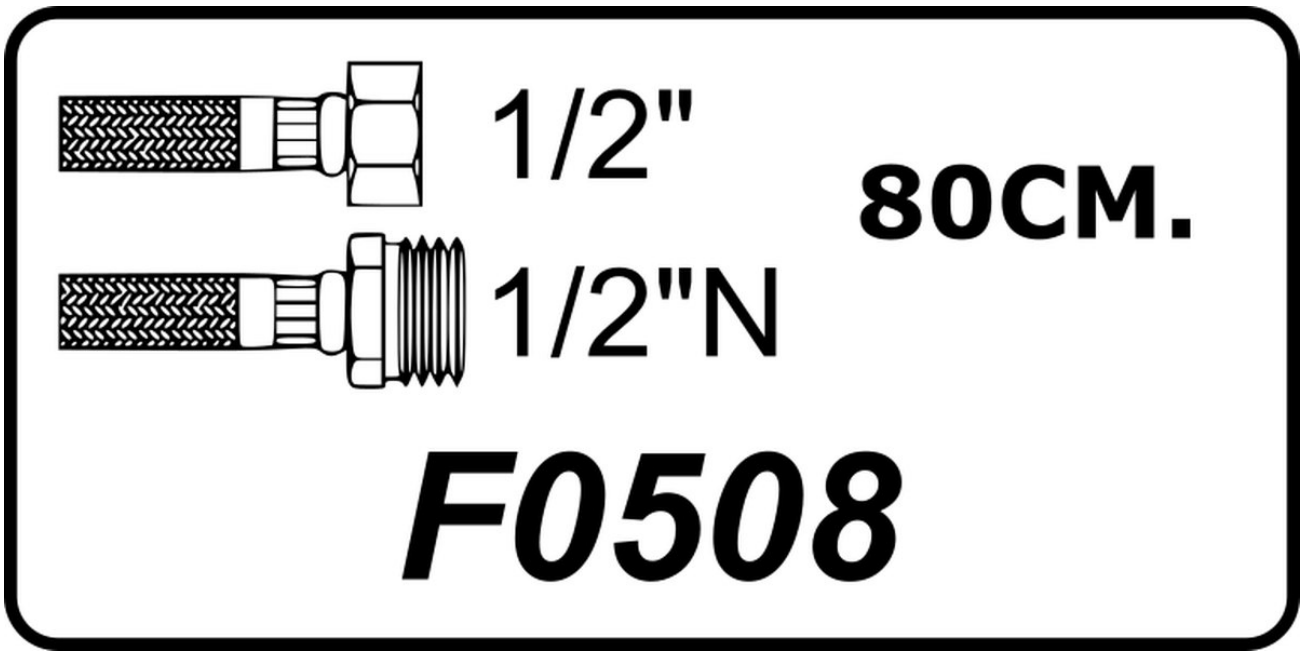

Confirm finish, quantity and destination with your quotation.

F0509 - FLEKS HORTUM 1/2"-1/2"N 90CM.

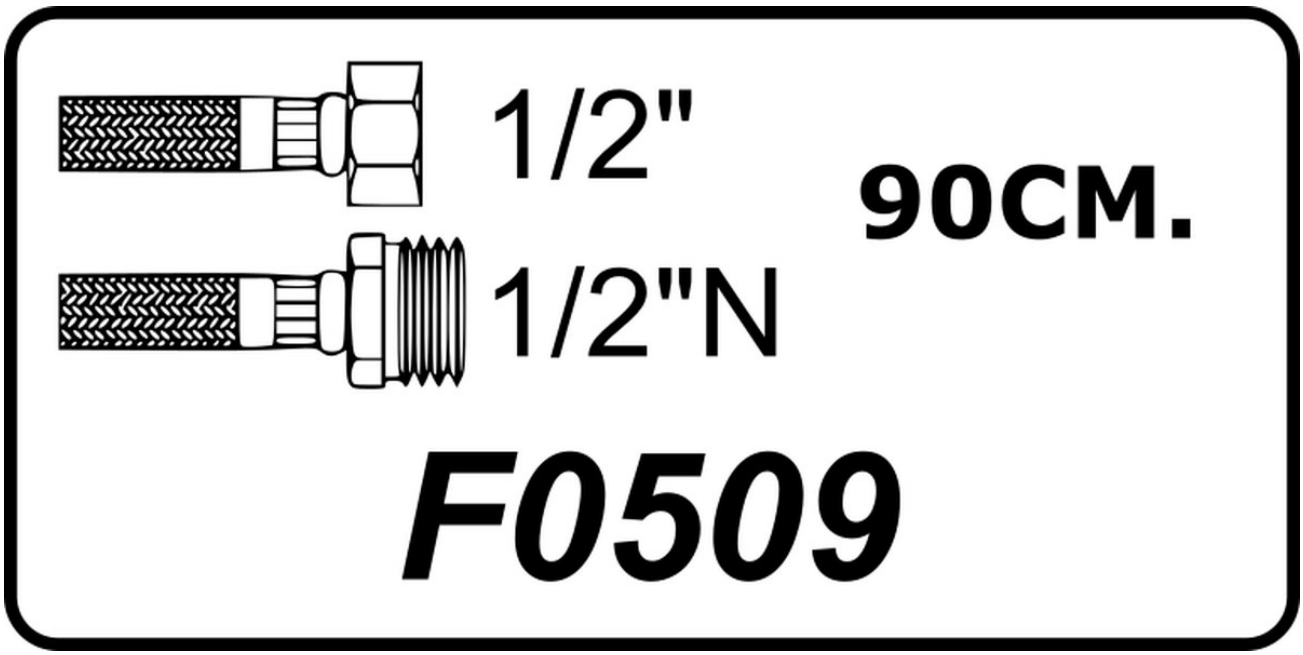

Confirm finish, quantity and destination with your quotation.

F0510 - FLEKS HORTUM 1/2"-1/2"N 100CM.

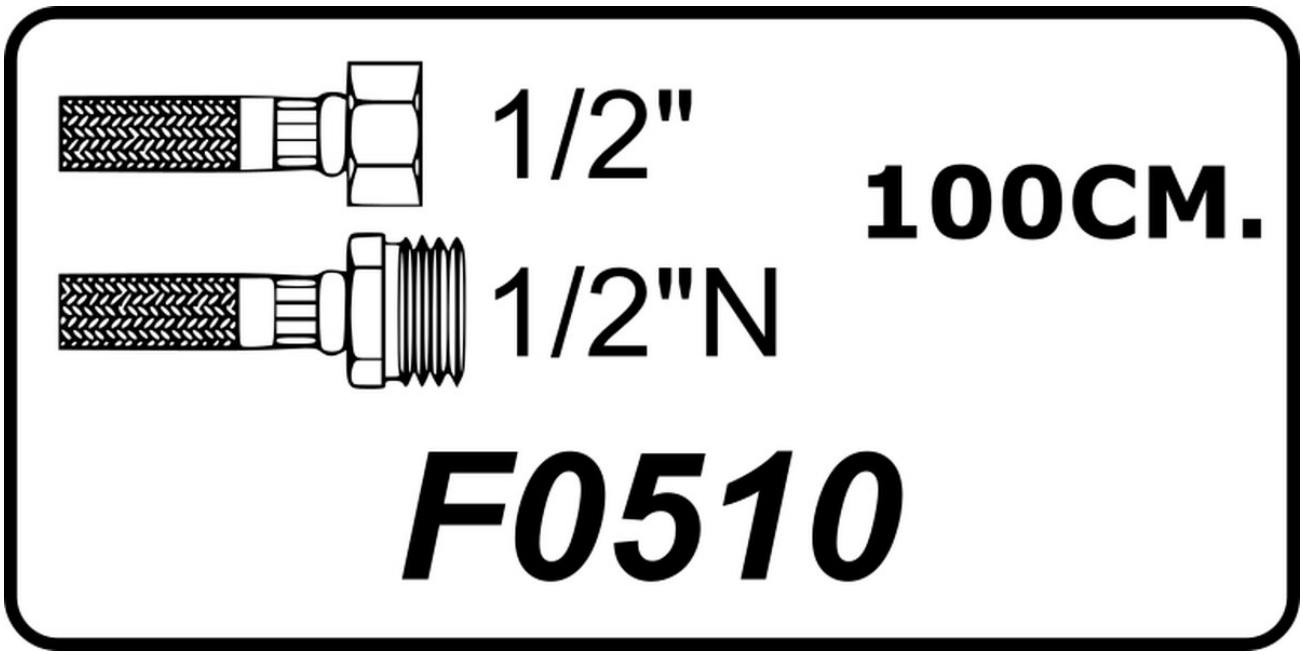

Confirm finish, quantity and destination with your quotation.

CARBOGA

shaping future

Request a quotation

Send model codes, finish, quantity and destination country.

info@carboga.com

+90 532 160 29 56

https://carboga.com

Giyimkent Business Center, 16th Street No: 37/B

Esenler, Istanbul, Türkiye